THIS COPY IS PROVIDED ON A RESTRICTED BASIS AND IS NOT TO BE USED IN ANY WAY DETRIMENTAL TO THE INTERESTS OF PANDUIT CORP.

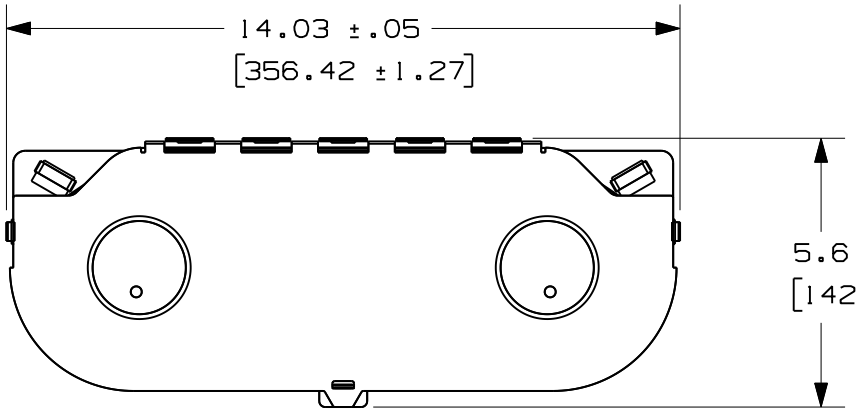

PANDUIT PART NO.	WEIGHT
FOSMF	0.5 LBS/EACH 0.23 Kg/EACH

SUPPLIED COMPONENTS:
1. (4)FUSION SPLICE CHIPS
2. (1)24-PORT GRID LABEL

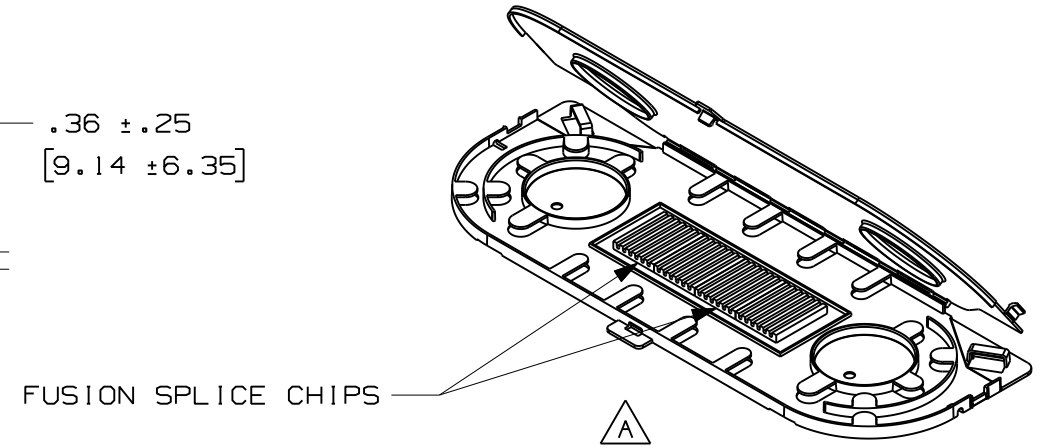

MODEL FILENAME: V10422AT_SPLICETRAY_ASSY_13.PRT

CAD FILENAME/LAYERS: V10422AT_DC_13A.PRT

PANDUIT CORP. TINLEY PARK, ILLINOIS

FIBER OPTIC SPLICE MODULE - FUSION (FOSMF) CUSTOMER DRAWING

UNLESS OTHERWISE SPECIFIED, DIMENSIONAL TOLERANCES ARE:

INCHES		[METRIC - MILLIMETER]		ANGLE
X.X	+/- 0.03	X.	+/- 0.8	+/- 1°
X.XX	+/- 0.015	X.X	+/- 0.4	
X.XXX	+/- 0.005	X.XX	+/- 0.13	

UNLESS OTHERWISE SPECIFIED, ALL DIMENSIONS ARE GIVEN IN INCHES, THIRD ANGLE PROJECTION.

REV	DATE	BY	CHK	DESCRIPTION	ECN - R	CUST	SUP	OTH
13A	6-6-07	MAV		A. UPDATED GEOMETRY & CAD REVISION	10422-41			
00	11-6-07	MAV	TCB	RELEASED	10422-41			

DRAWN BY: MAV
DATE: 11-6-07
CHK'D: TCB
MAT'L: SEE NOTES
SCALE: NONE
DRAWING NO.: 10422-41
DWG SIZE: A