THIS COPY IS PROVIDED ON A RESTRICTED BASIS AND IS NOT TO BE USED IN ANY WAY DETRIMENTAL TO THE INTERESTS OF PANDUIT CORP.

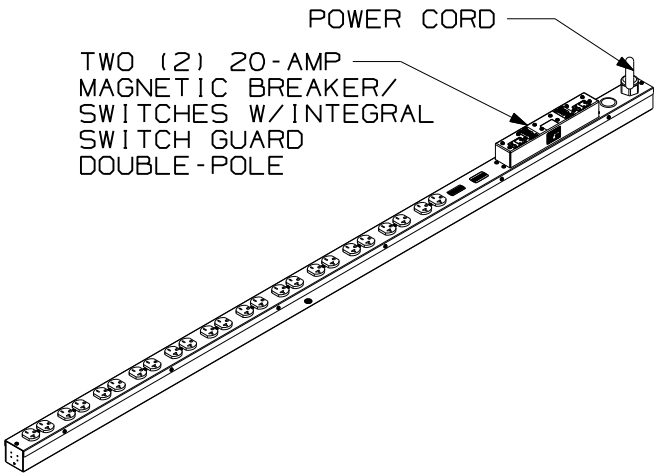

PANDUIT P/N	WEIGHT
RPSV243620TL6	17.0 LBS/EACH 7.7 Kg/EACH

NOTES:
1. VISIT OUR ON-LINE CATALOG AT WWW.PANDUIT.COM FOR A CURRENT LIST OF PRODUCTS APPLICABLE FOR USE WITH THIS PART.
2. ACCESSORY COMPONENTS:
   (2) #10-32 X 1/2" MOUNTING SCREWS
   (2) #12-24 X 1/2" MOUNTING SCREWS
   (2) #10-32 LOCKING COLLAR SCREWS
   (2) L-BRACKETS
3. THE POWER STRIP SHALL HAVE THE FOLLOWING:
   -TWENTY-FOUR (24) - NEMA 6-20R OUTLETS (12 DUPLEX 20 AMP RECEPTACLES) ALTERNATING COLOR CODED RED & GRAY
   -10-FOOT POWER CORD WITH NEMA L6-30P TWIST LOCK PLUG
4. DIMENSIONS IN PARENTHESES ARE METRIC (mm).

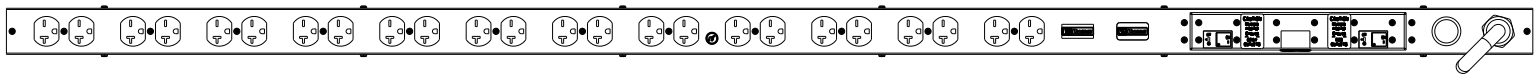

FRONT VIEW

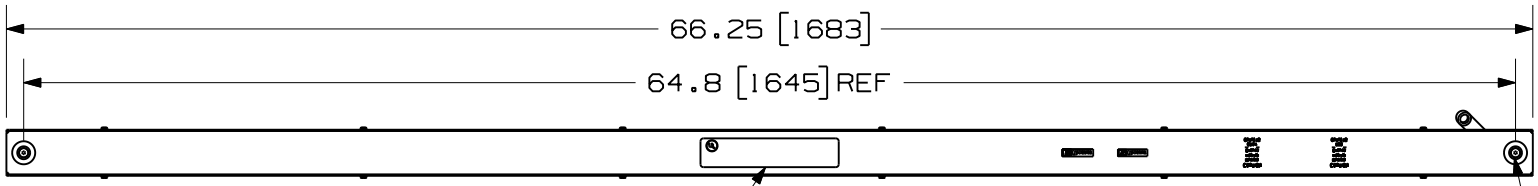

BACK VIEW

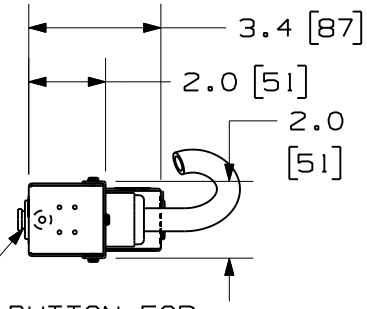

MODEL FILENAME: V10341BV_DC/01B.PRT

CAD FILENAME/LAYERS: V10341BV_DC_01B.PRT

PANDUIT CORP. TINLEY PARK, ILLINOIS

66" VERTICAL RACK MOUNT POWER STRIP
30 AMP 250V (RPSV243620TL6)
CUSTOMER DRAWING

UNLESS OTHERWISE SPECIFIED, DIMENSIONAL TOLERANCES ARE:

INCHES		[METRIC - MILLIMETER]		ANGLE
X.X	± 0.06	X.	± 1.5	± 1°
X.XX	± 0.03	X.X	± 0.8	
X.XXX	± 0.015	X.XX	± 0.4	

UNLESS OTHERWISE SPECIFIED, ALL DIMENSIONS ARE GIVEN IN INCHES, THIRD ANGLE PROJECTION.

REV	DATE	BY	CHK	DESCRIPTION	ECN - R	CUST	SUP	OTH
01B	4-29-09	MRWA		ADDED TO NOTES AND ADDED COPYRIGHT LOGO TO UL	10341-12			
00A	7-10-07	LEE		RELEASED TO PRODUCTION	10341-12			

DRAWN BY: LEE

DATE: 7-10-07

CHK'D:

MAT'L: COLD-ROLLED STEEL

SCALE: NONE

DRAWING NO.: 10341-12

DWG SIZE: A