THIS COPY IS PROVIDED ON A RESTRICTED BASIS AND IS NOT TO BE USED IN ANY WAY DETRIMENTAL TO THE INTERESTS OF PANDUIT CORP.

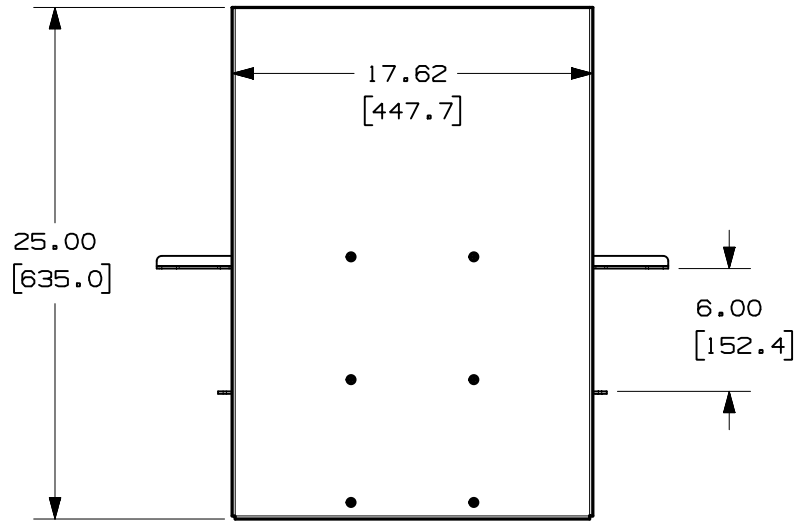

PANDUIT P/N	WEIGHT
NFSHLF19X25	22.0 LBS/EACH 9.9 Kg/EACH

NOTES:
1. VISIT OUR ON-LINE CATALOG AT WWW.PANDUIT.COM FOR A CURRENT LIST OF PRODUCTS APPLICABLE FOR USE WITH THIS PART.
2. COMPONENTS:
   1- SHELF
   1- FRONT MOUNTING BRACKET
   1- REAR MOUNTING BRACKET
   4- #10-32 X 3/8" UNDERCUT SCREWS
   8- #12-24 X 1/2" SCREWS
   8- M6 METRIC SCREWS
3. SHELF CAN BE ADJUSTED TO 2 POSITIONS.
4. DIMENSIONS IN PARENTHESIS ARE METRIC.
5. LOAD CAPACITY OF 250 LBS.

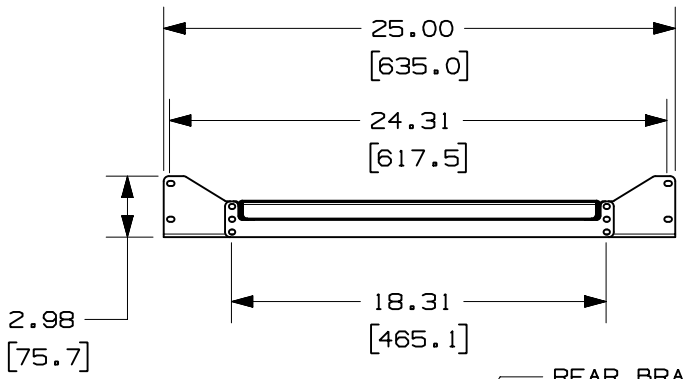

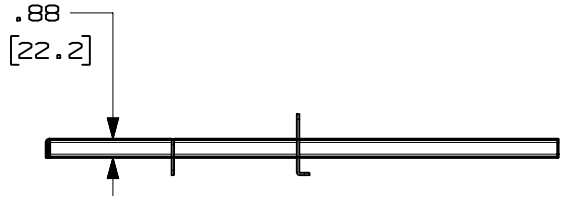

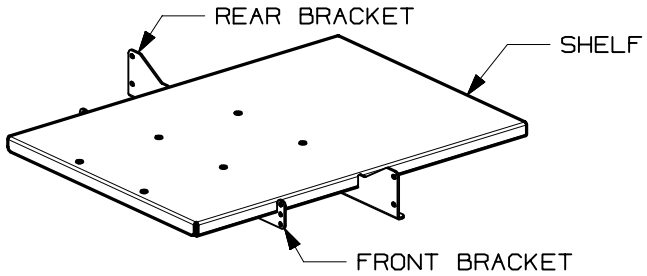

MODEL FILENAME: V10121AA_NF_SHLF_ASSY_02.PRT (REF SET 25)

CAD FILENAME/LAYERS: V10121AA_DC_02B.PRT

PANDUIT CORP. TINLEY PARK, ILLINOIS

19" X 25" NETFRAME SHELF
(NFSHLF19X25)
CUSTOMER DRAWING

UNLESS OTHERWISE SPECIFIED, DIMENSIONAL TOLERANCES ARE:
(.X) ± .03 (.XXX) ± .005
(.XX) ± .015 ANGLES ± 1°

UNLESS OTHERWISE SPECIFIED, ALL DIMENSIONS ARE GIVEN IN INCHES, THIRD ANGLE PROJECTION.

REV	DATE	BY	CHK	DESCRIPTION	ECN - R	CUST	SUP	OTH
1	10-22-04	TKW		A. PART'S WEIGHT WAS 31.9 LBS (14.5 Kg)	10121-14			
R	7-31-03	JDWE	GM	RELEASED TO PRODUCTION	10121-14	RTSU	RTSU	

DRAWN BY: JDWE
DATE: 7-31-03
CHK'D: GM

MAT'L: STEEL- POWDER COATED BLACK

SCALE: NONE

DRAWING NO.: 10121-14

DWG SIZE: A