THIS COPY IS PROVIDED ON A RESTRICTED BASIS AND IS NOT TO BE USED IN ANY WAY DETRIMENTAL TO THE INTERESTS OF PANDUIT CORP.

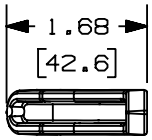

PANDUIT P/N	WEIGHT
WMSRC1**	.40 LB/10 PCS (181.8 G/10 PCS)

NOTES:

** 1. SEE CURRENT CATALOG FOR ADDITIONAL PART SUFFIXES TO INDICATE COLOR AND OR PACKAGE QUANTITY.
2. TO BE USED WITH WMPH1. CAN BE MOUNTED ON LEFT OR RIGHT FRONTSIDE OF WMPH1.
3. (4) #12-24 X 1/2" UNC ROUND HEAD SCREWS ARE INCLUDED WITH CLIP.
4. ALL DIMENSIONS IN PARENTHESES ARE IN METRIC.

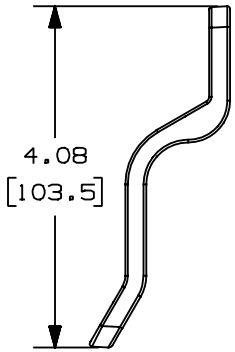

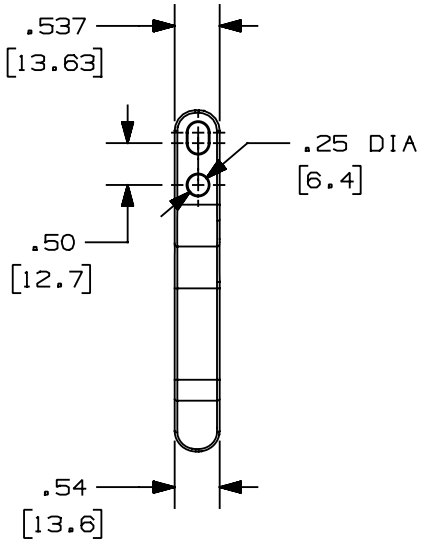

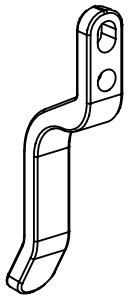

REV	DATE	BY	CHK	DESCRIPTION	ECN	CHK	CUST	SUP
R	7-29-97	RCA		RELEASED TO PRODUCTION	35319-02			

CAD FILENAME/LAYERS: M35319BG_DC_00A.PRT

PANDUIT CORP. TINLEY PARK, ILLINOIS

WIRE MGMT. STRAIN RELIEF CLIP (WMSRC1**)
CUSTOMER DRAWING

UNLESS OTHERWISE SPECIFIED, DIMENSIONAL TOLERANCES ARE:
(.X) ± (.XXX) ± .010(.3)
(.XX) ± .03(.8) ANGLES ±

UNLESS OTHERWISE SPECIFIED, ALL DIMENSIONS ARE GIVEN IN INCHES, THIRD ANGLE PROJECTION.

DRAWN BY: RCA
MAT'L: NYLON
SCALE: NONE
DATE: 7-29-97
DRAWING NO.: 35319-02
DWG SIZE: A
CHECKED BY: