THIS COPY IS PROVIDED ON A RESTRICTED BASIS AND IS NOT TO BE USED IN ANY WAY DETRIMENTAL TO THE INTERESTS OF PANDUIT CORP.

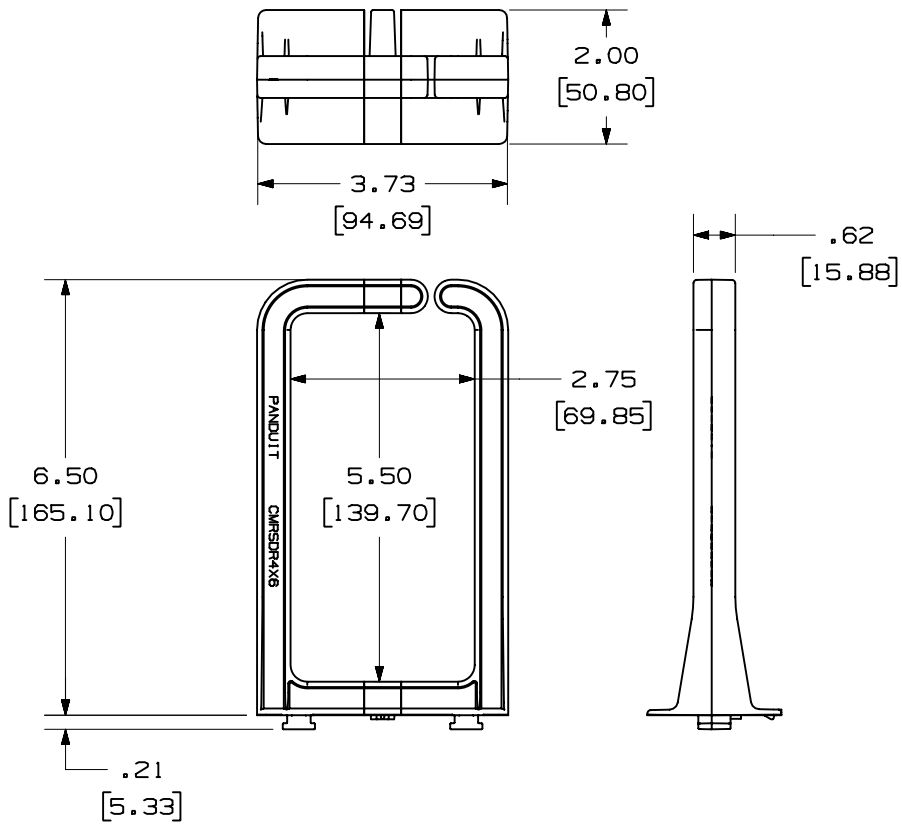

PANDUIT P/N	WEIGHT
NFDR4X6K	1.2 LB/8 PCS (543 g/8 PCS)

NOTES:
1. VISIT OUR ON-LINE CATALOG AT WWW.PANDUIT.COM FOR A LIST OF CURRENT PARTS APPLICABLE FOR USE WITH THIS PRODUCT.
2. DIMENSIONS IN PARENTHESES ARE IN METRIC (mm).
3. COMPONENTS:
   8- D-RINGS

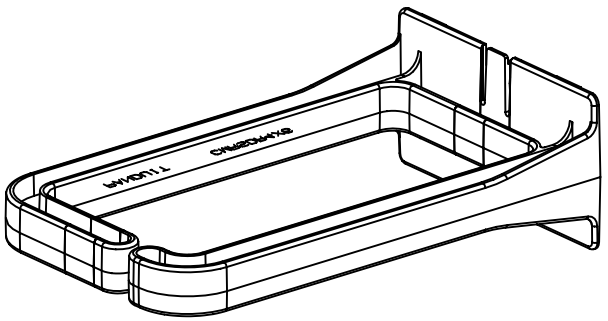

REV	DATE	BY	CHK	DESCRIPTION	ECN	CHK	CUST	SUP
1	12-3-02	JDWE		C. REVISED NOTE 1. B. CHANGED PART NUMBER FROM CMRSDR4X6. A. ADDED NOTE 3. (PART NOW SOLD AS SET OF 8)	01074-10			
R	8-2-01	JDWE	MAV	RELEASED TO PRODUCTION.	01074-10	RTSU		

CAD FILENAME/LAYERS: M01074BH_DC_02B.PRT

PANDUIT CORP. TINLEY PARK, ILLINOIS

CABLE MANAGEMENT RACK SYSTEM
EXPANDED D-RING (NFDR4X6K)
CUSTOMER DRAWING

UNLESS OTHERWISE SPECIFIED, DIMENSIONAL TOLERANCES ARE:
(.X) ± (.XXX) ±.010(.3)
(.XX) ±.03(.8) ANGLES ±

UNLESS OTHERWISE SPECIFIED, ALL DIMENSIONS ARE GIVEN IN INCHES, THIRD ANGLE PROJECTION.

DRAWN BY: JDWE
DATE: 8-2-01
CHECKED BY: MAV
MAT'L: PC
SCALE: 2/5
DRAWING NO.: 01074-10
DWG SIZE: A