THIS COPY IS PROVIDED ON A RESTRICTED BASIS AND IS NOT TO BE USED IN ANY WAY DETRIMENTAL TO THE INTERESTS OF PANDUIT CORP.

PANDUIT P/N	WEIGHT
CMDRHD2	.91 LB/10 PCS (413.8 g/10 PCS)

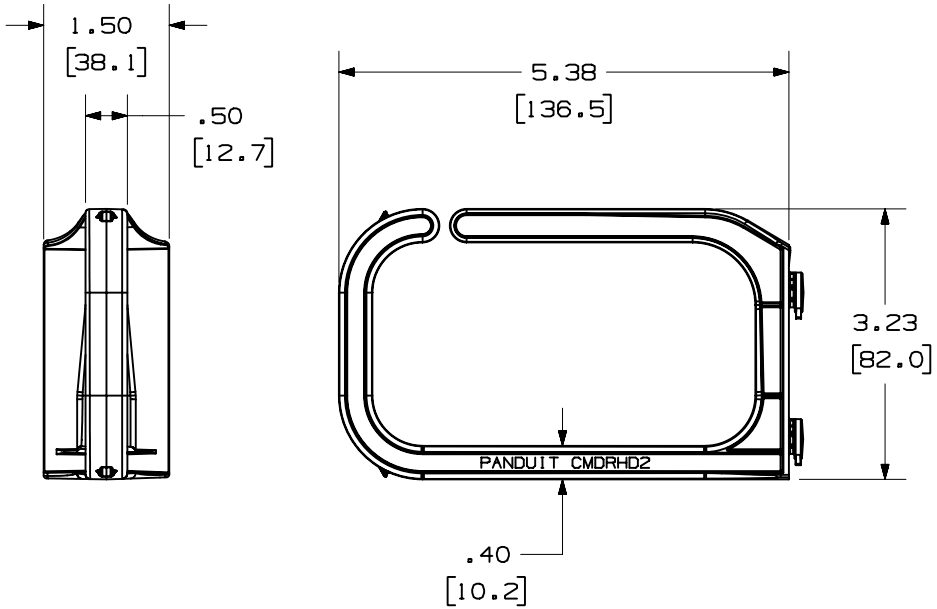

NOTES:
1. SEE CURRENT CATALOG FOR ADDITIONAL PART NUMBER SUFFIXES TO INDICATE COLOR AND OR PACKAGE QUANTITY.
2. SEE CATALOG FOR COMPLETE LIST OF PARTS APPLICABLE FOR USE WITH THIS PART.
3. DIMENSIONS IN PARENTHESES ARE IN METRIC.

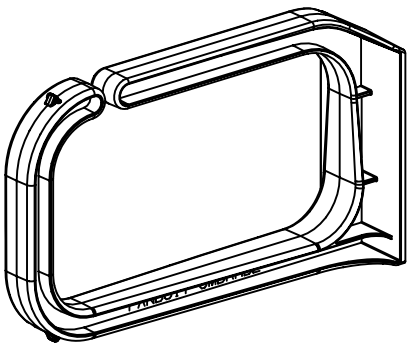

REV	DATE	BY	CHK	DESCRIPTION	ECN	CHK	CUST	SUP
1	4-29-02	JDWE		A. UPDATED GEOMETRY	00072-13			
R	7-16-98	JSP	SJA	RELEASED TO PRODUCTION.	00072-13			

MODEL FILENAME: M00072BB_RCMDRHD2_04.PRT

CAD FILENAME/LAYERS: M00072BB_DC_04A.PRT

PANDUIT CORP. TINLEY PARK, ILLINOIS

OPEN CABLE MANAGEMENT RING HIGH DENSITY (CMDRHD2) CUSTOMER DRAWING

UNLESS OTHERWISE SPECIFIED, DIMENSIONAL TOLERANCES ARE:
(.X) ± (.XXX) ±.010(.3)
(.XX) ±.03(.8) ANGLES ±

UNLESS OTHERWISE SPECIFIED, ALL DIMENSIONS ARE GIVEN IN INCHES, THIRD ANGLE PROJECTION.

DRAWN BY: JSP
DATE: 7-16-98
CHECKED BY: SJA
MAT'L: PC
SCALE: NONE
DRAWING NO.: 00072-13
DWG SIZE: A