SYSTEM 14

Tile Replacement Loudspeaker Assembly
Extended Frequency Response

0104.5 - TILE REPLACEMENT LOUDSPEAKER

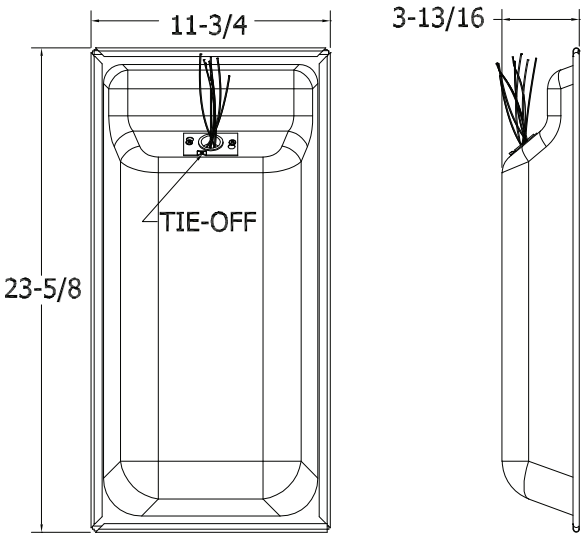

GENERAL DESCRIPTION

The SYSTEM14 is a complete loudspeaker assembly with a 8" O.D. wide frequency response, coaxial speaker, 10W-70.7V, low loss, extended frequency response pigtail transformer, perforated steel baffle, and integral molded fiber enclosure; one 24" white "T" bar supplied to finish edge.
Finish: Baked epoxy hybrid.

INTENDED USE

Mounted parallel to floor plane in a 24" wide suspended ceiling tile grid; indoor environment.
Program Material: Music, voice and signal tones

SYSTEM COMPONENTS

Loudspeaker	8C10FECO
Transformer	10W*, 70.7V, pigtail

*10W, 5W, 2.5W, 1.25W, 0.63W

FINISH OPTIONS

White	Order as SYSTEM14
Black	Order as SYSTEM14/B

AUDIO SPECIFICATIONS:

Average Sensitivity	95 dB-SPL, 1W/ 1M
Loudspeaker Power Rating	20W-RMS, EIA 426A Standard
Calculated Maximum System Output	105dB-SPL, 10W / 1M
Magnet Type, Weight	BeFe Ceramic, 10 oz. Nominal
Frequency Response	40—20kHz EIA 426A Standard
Nominal Coverage Angle	100° Included angle, -6dB 2 kHz, half Space
Audio Connection	7" long, jumper select, tinned wires, pre-cut

Recommended construction sequences, installation instructions and A&E Guide Specs are available in various formats in the 'A&E Resources Section' at: www.quamspeakers.com

Quam-Nichols Company
234 East Marquette Road, Chicago, IL 60637
Phone: (800) NEED NOW Fax: (888) NEED NOW
(800) 633 - 3669 (888) 633 - 3669
E-Mail: neednow@qnc.com www.quamspeakers.com

© 2012 Quam-Nichols Company Quam-Nichols reserves the right to make changes and/or improvements to its products at any time and without notice.

(1′ x 2′) SYSTEM 5/VC, SYSTEM 14, SYSTEM 16 – includes 8-Ohm, /25RS and /70RS versions
(2′ x 2′) SYSTEM 12/VC, SYSTEM 15, SYSTEM 17 – includes 8-Ohm, /25RS and /70RS versions

INTENDED USE:
All versions: Indoor environment, mounted parallel to floor plane in a 24″ wide, suspended ceiling tile grid; mount height 18′ or less above floor plane.
Program material: Signal tones, voice and music.

1. Cut ceiling tile as required:
1′ x 2′ FORMAT LOUDSPEAKER
2′ x 2′ tile – Cut tile in half along one axis.
2′ x 4′ tile – Cut 12″ from edge along 2′ axis and discard smaller piece.
2′ x 2′ FORMAT LOUDSPEAKER
2′ x 2′ tile – No cutting required.
2′ x 4′ tile – Cut tile in half along 2′ axis.

! Steps 2-3 – Required only if using conduit clamp fitting *other than what is provided* with product.

2. Loosen, but do not remove screws on cover plate; push up and remove plate from assembly.

3. Remove cable /conduit clamp fitting from plate; Install UL Listed metallic enclosure entry fitting for plenum cable or flex whip.

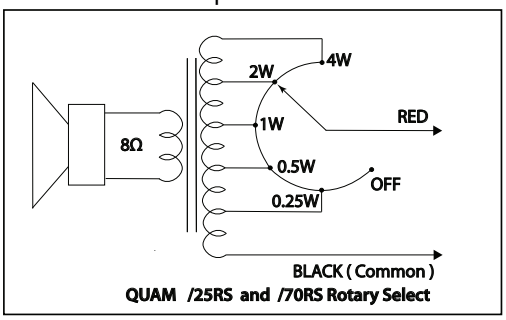

QUAM /25RS and /70RS Rotary Select

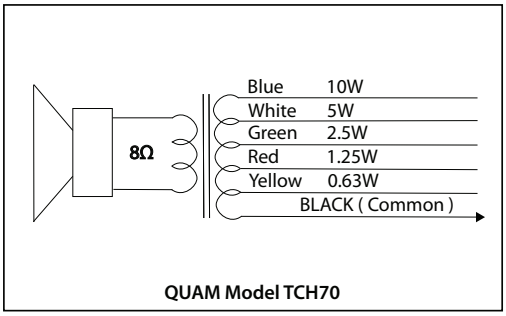

QUAM Model TCH70

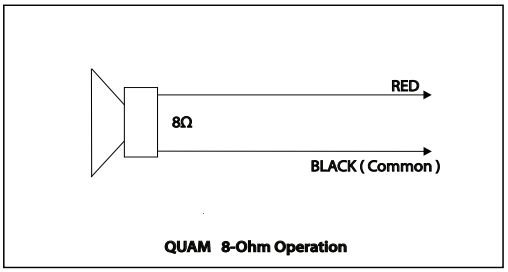

QUAM 8-Ohm Operation

4. Feed supply cable through whip to connector.
Make connections per wiring diagrams below;
Insulate all unused taps from each other, the enclosure and electrical ground.

When cover plate is secured, all connections / splices and unused leads must be inside of the enclosure.

5. Place assembly onto ceiling grid, install 24″ T-bar trim piece where required (furnished only with specific 1′x2′ formats).

NOTE! AHJ/ local codes may require tie-off to structure. Bend up tie-off tabs as shown in illustration and install as directed.

NOTE! AHJ/ local codes may require tie-down to grid. Recommended fasteners; *not supplied*: Erico/Caddy part ATA4i and 1/4″-20 x 2″ bolt, or equivalent. Install as directed.

6. Place remaining ceiling tile into opening as required.

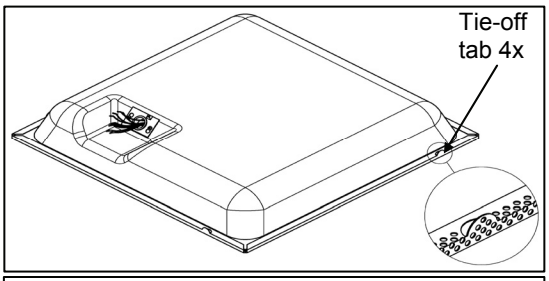

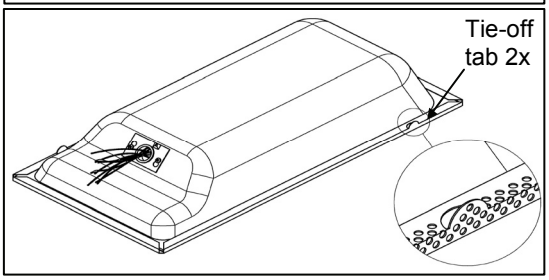

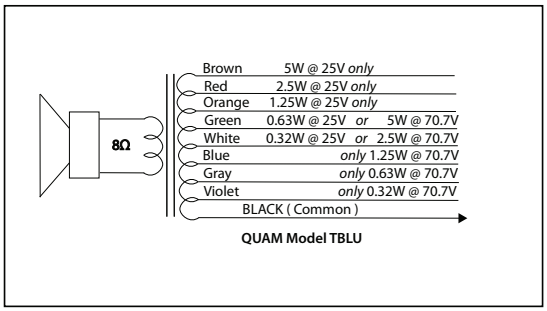

QUAM Model TBLU

Quam
234 East Marquette Road, Chicago, IL 60637
Phone: (800) NEED NOW Fax: (888) NEED NOW
(800) 633 - 3669 (888) 633 - 3669
E-Mail: neednow@qnc.com www.quamspeakers.com

RoHS Compliant

MADE IN CHICAGO

© 2012 Quam-Nichols Company Quam-Nichols reserves the right to make changes and/or improvements to its products at any time and without notice.