Passive CCTV Power Integrator Hub, 24VAC
500136-US, 500136-UK, 500136-Eur

Overview

The Passive CCTV Power Integrator Hub allows video, remote power and PTZ control to be transmitted via one Cat5e/6 cable between the CCTV camera and the DVR/IP encoder in the security video environment.

The product features a built-in 16-channel CCTV power supply (350VA) that supplies 24VAC or 28VAC to each CCTV camera. The hub works in conjunction MuxLab's 500000R, 500009, 500022, 500023, 500024 and 500029 CCTV baluns.

Features/Benefits

Built-in 16-channel 350VA PSU
Voltage selector switch per port: 24VAC or 28VAC
Port configuration: Power-Thru or Pass-Thru mode
2U rack height
Auto-resettable fuses on each port
Seamless integration with 500130, 500022, 500024
5 year warranty

Specifications			
Environment	Composite video; NTSC, PAL, SECAM		
Devices	CCTV cameras, DVRs, IP encoders, monitors, switchers and other CCTV equipt.		
Transmission	Transparent to the user.		
Video			
Bandwidth	DC to 8 MHz.		
Maximum Input	1.1Vp-p		
Insertion Loss	Less than 2 dB per pair over the frequency range		
Return Loss	Greater than 15 dB over the frequency range from 20Hz to 8 MHz		
Common Mode Rejection	Greater than 40 dB @ 8 MHz		
Max. Distance	Cat 5e/6 – 2,200 ft. (670m)* **Shorter distances will result with DVR equipment. Typically 1,000 to 1,500 ft*		
Remote Power			
Port Configuration Switch	**Pass-Thru Mode (500022)**	**Power-Thru Mode (500024/500029)**	
Number of twisted pairs	Two (2)	Three (3)	
Max. Distance @ 24VAC	5 VA: 350 ft (107m) 10 vA: 175 ft (53m) 20 VA: 90 ft (30m) 30 vA: 60 ft (20m)	5 VA: 518 ft (170m) 10 VA: 259 ft (85 m) 20 VA: 130 ft (43 m) 30 VA: 86 ft (28 m)	
Maximum Power Rating	350VA, 60 Hz		
Voltage Selector Switch	Sets port to 24 VAC or "OFF" or 28 VAC. Factory default: "OFF"		
Maximum Input Voltage & Current Rating	**500136-US**: 120 Volts ac, 3.5 Amps, 60 Hz **500136-UK** or **500136-Eur**: 240 Volts ac, 1.75 Amps, 50Hz		
Max Output Voltage per port	28Vac or 24Vac @ full load ; 31 Vac or 27 Vac @ no load		
Max Output Power per port	22 VA @ 28 Vac or 16 VA @ 24 Vac		
Max Output Current per port	0.78 A ac		
Fuses	Auto-Reset type, all ports individually protected, no service required		
LED Indicators	Master Power ON, green; 16 Ports Power On, green		
2-Wire PTZ Control (i.e. RS-422, Manchester/Bi-Phase, half duplex RS485) – Pass-Thru Mode (500022)			
Wiring	Remote 2-wire PTZ control supported via one (1) twisted pair.		
Maximum Distance	Up to 4,000 ft (1.2 km) depending on the PTZ camera vendor** ***Please consult your CCTV equipment vendor for more detailed performance specifications.*		
Maximum Power Rating	50 Volts (AC RMS/DC); 3A (AC RMS/DC)		
Mechanical & Environmental			
Cable – UTP	24 AWG or lower solid copper twisted pair wire impedance: 100 ohms at 1 MHz Maximum capacitance: 20 pf/foot. Attenuation: 6.6 dB/1000 ft at 1 MHz		
Connectors	Video: Sixteen (16) BNC-F Control: Sixteen (16) 2-pole screw terminals. Combined signals: Sixteen (16) RJ45 jacks		
RJ45 Pin Configuration* **Reverse polarity sensitive*	**Signal**	**500022 Mode**	**500024/500029 Mode**
	Power A (+)	1, 3	1, 3, 5
	Power B (-)	2, 6	2, 4, 6
	Control (+)	4	Not used
	Control (-)	5	Not used
	Video BNC Center (Tip)	7 [T] opposite to 500000	7 [T] opposite to 500000
	Video BNC Ground (Ring)	8 [R] opposite to 500000	8 [R] opposite to 500000
Temperature	Operating: 0° to 40°C. Storage:-20° to 85°C. Humidity: up to 95%		

Head Office
Internet:www.muxlab.com
E-mail: videoease@muxlab.com

Specifications (Cont'd)	
Enclosure	Black, anodized aluminium
Dimensions	19" (48.26 cm) W x 3.5" (8.8 cm) H x 9.0" (23 cm) D
Weight	23 lbs. (11kgs)
Regulatory	FCC, cUL, CE
Warranty	5 years
Order Information	500136-US Passive CCTV Power Integrator Hub, 24/28 VAC – US 500136-UK Passive CCTV Power Integrator Hub, 24/28 VAC – UK 500136-Eur Passive CCTV Power Integrator Hub, 24/28 VAC – Eur

Typical Application

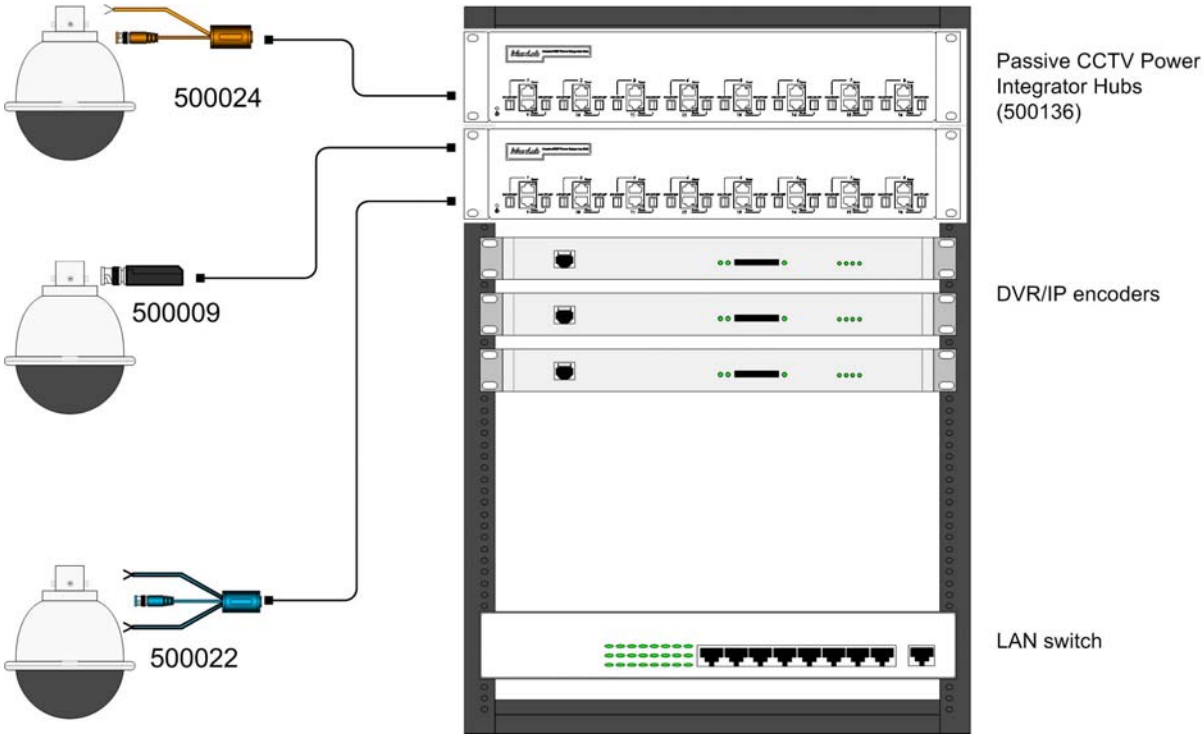

Head Office
Internet:www.muxlab.com
E-mail: videoease@muxlab.com