REMOVING REAR PANEL FROM CABINET

THIS STEP IS OPTIONAL, THE CABINET CAN BE MOUNTED WITH THE REAR PANEL ATTACHED

STEP 1. DETERMINE WHICH SIDE THE CABINET WILL HINGE FROM. THE CABINET IS SHOWN WITH THE HINGE ON THE LEFT SIDE, INVERT THE CABINET IF YOU WANT THE HINGE ON THE RIGHT SIDE.

STEP 2. UNLOCK THE REAR FRAME AND OPEN IT TO GET ACCESS TO THE HINGE BOLT NUTS.

STEP 3. REMOVE THE CENTER BOLT FROM THE BOTTOM HINGE ONLY. LOOSEN THE OTHER TWO BOLT NUTS ON THE BOTTOM HINGE. DO NOT REMOVE OR LOOSEN THE BOLTS ON THE TOP HINGE.

STEP 4. SLIDE THE BOTTOM HINGE PIN UP UNTIL THE LOOSENED BOLTS REACH THE END OF THE SLOT. REMOVE THE REAR FRAME BY MOVING THE BOTTOM OF THE FRAME TO THE REAR AND THEN DOWNWARD TO DISENGAGE IT FROM THE TOP HINGE PLATE.

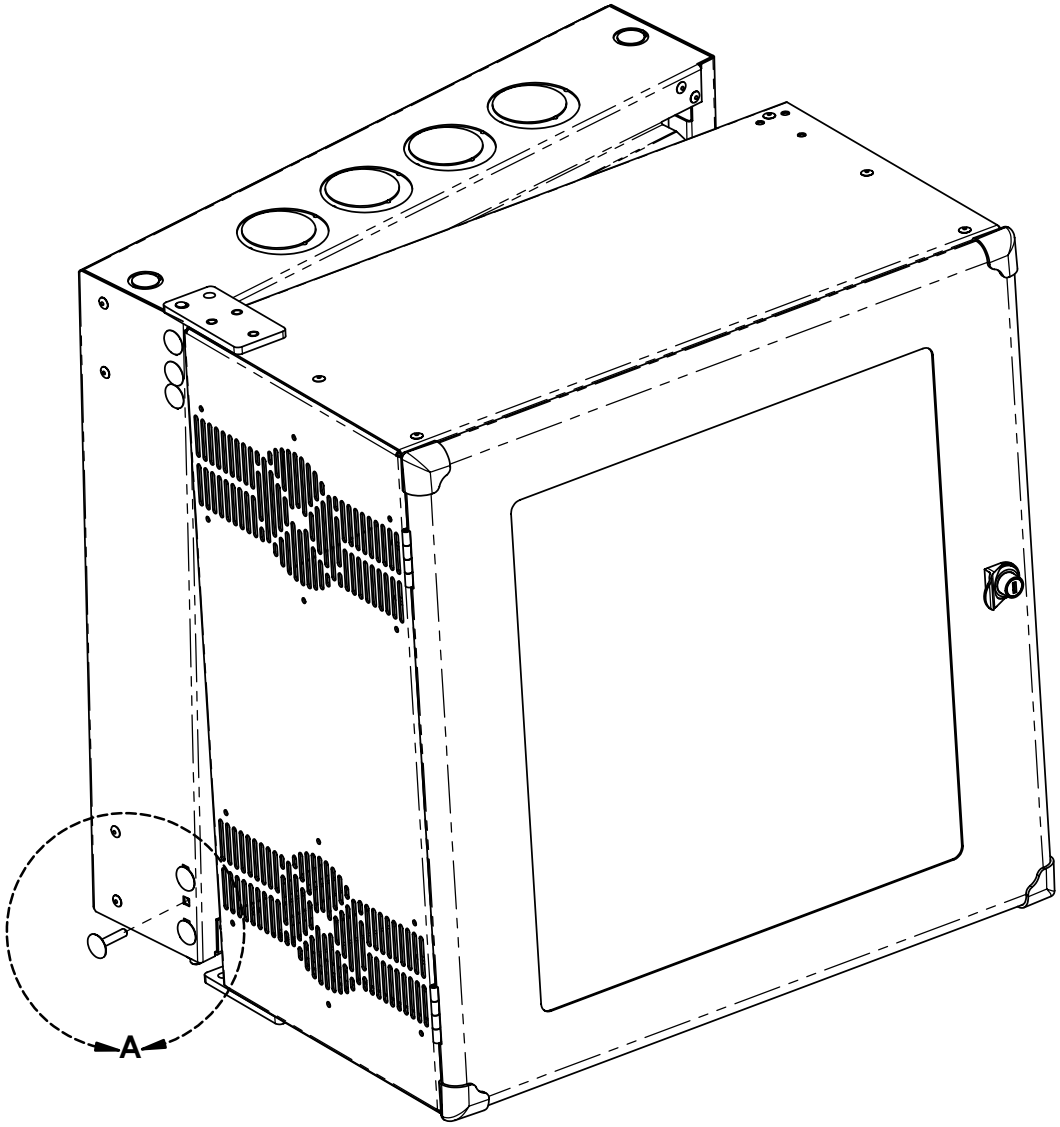

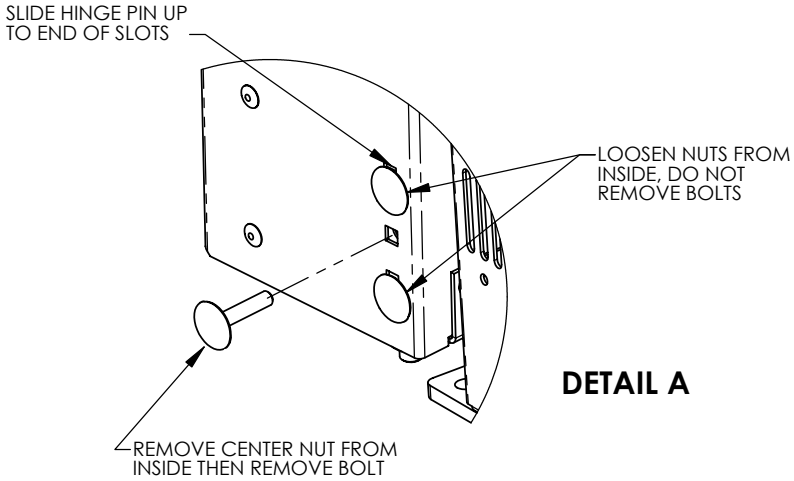

DETAIL A

CHATSWORTH PRODUCTS, INC.

INSTALLATION INSTRUCTIONS, CUBE-IT+ CABINET

THIS DRAWING CONTAINS INFORMATION PROPRIETARY TO CHATSWORTH PRODUCTS, INC. ANY REPRODUCTION DISCLOSURE OR USE OF THIS DRAWING IS EXPRESSLY FORBIDDEN EXCEPT AS AGREED TO IN WRITING BY CHATSWORTH PRODUCTS, INC.

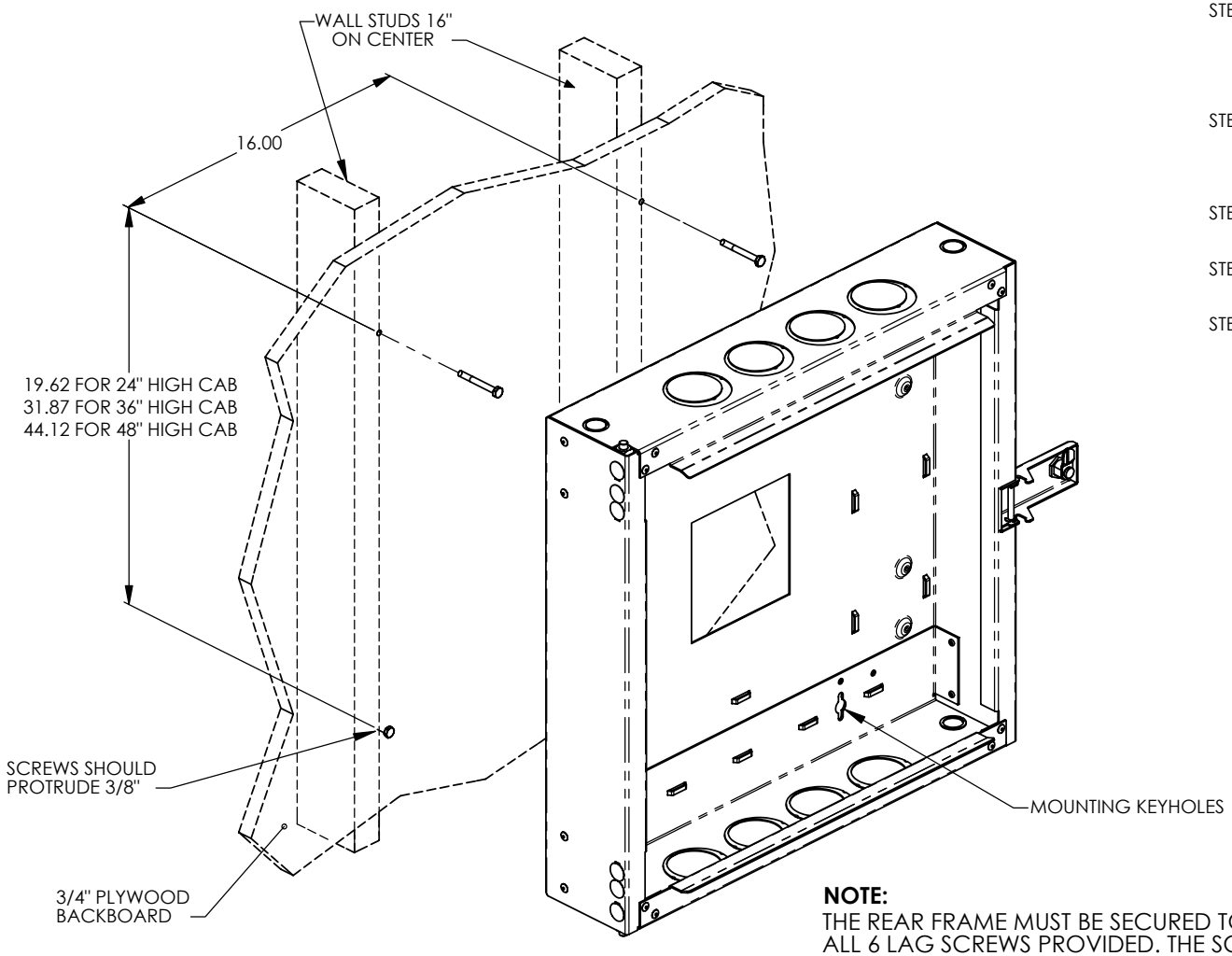

MOUNTING REAR PANEL TO WALL

STEP 1. INSURE THAT THE WALL OR MOUNTING SURFACE HAS SUFFICIENT STRENGTH TO SUPPORT THE CABINET AND THE EXPECTED CABINET PAYLOAD. THE MOUNTING SURFACE MUST ALSO BE FLAT AND EXTEND BEYOND THE TOP, BOTTOM, LEFT, AND RIGHT EDGES OF THE REAR PANEL.

STEP 2. DRILL 11/64" PILOT HOLES FOR THE FOUR 1/4-10 X 2" LAG SCREWS TO THE DIMENSIONS SHOWN ON THE DRAWING OR USE THE MOUNTING TEMPLATE PROVIDED.
THE SCREWS SHOULD GO DIRECTLY INTO THE WALL STUDS.

STEP 3. INSTALL THE LAG SCREWS INTO THE HOLES. THE SCREW HEAD SHOULD PROTRUDE ABOUT 3/8" FROM THE WALL.

STEP 4. MOUNT THE REAR FRAME TO THE WALL BY HOOKING THE KEYHOLES OVER THE SCREWS. TIGHTEN THE SCREWS SECURELY.

STEP 5. INSTALL THE REMAINING 2 LAG SCREWS IN THE HOLES BELOW THE TOP TWO KEYHOLES.

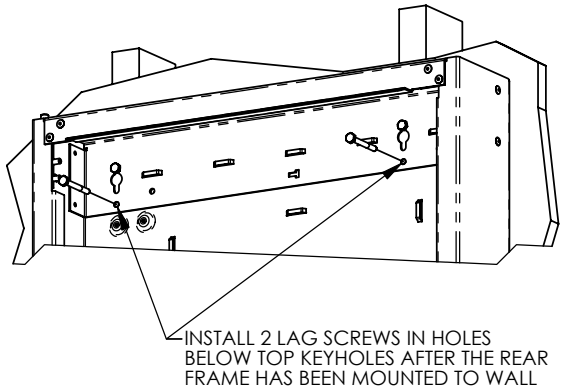

NOTE:
THE REAR FRAME MUST BE SECURED TO WALL USING ALL 6 LAG SCREWS PROVIDED. THE SCREWS ARE INTENDED TO GO THROUGH 3/4" PLYWOOD BACK-BOARD AND THEN INTO WOOD WALL STUDS. FOR MASONRY SURFACE, THE INSTALLER MUST PROVIDE APPROPRIATE HARDWARE.

CHATSWORTH PRODUCTS, INC.

INSTALLATION INSTRUCTIONS, CUBE-IT+ CABINET

THIS DRAWING CONTAINS INFORMATION PROPRIETARY TO CHATSWORTH PRODUCTS, INC. ANY REPRODUCTION DISCLOSURE OR USE OF THIS DRAWING IS EXPRESSLY FORBIDDEN EXCEPT AS AGREED TO IN WRITING BY CHATSWORTH PRODUCTS, INC.

MOUNTING CABINET TO REAR PANEL

STEP 1. HOOK THE TOP HINGE PLATE ONTO THE TOP HINGE PIN.
STEP 2. ALIGN THE BOTTOM HINGE PLATE HOLE WITH THE BOTTOM HINGE PIN. SLIDE THE HINGE PIN DOWN INTO THE HINGE HOLE AS FAR AS POSSIBLE.
STEP 3. REINSTALL THE CENTER BOLT AND NUT. TIGHTEN ALL THREE BOTTOM NUTS SECURELY.

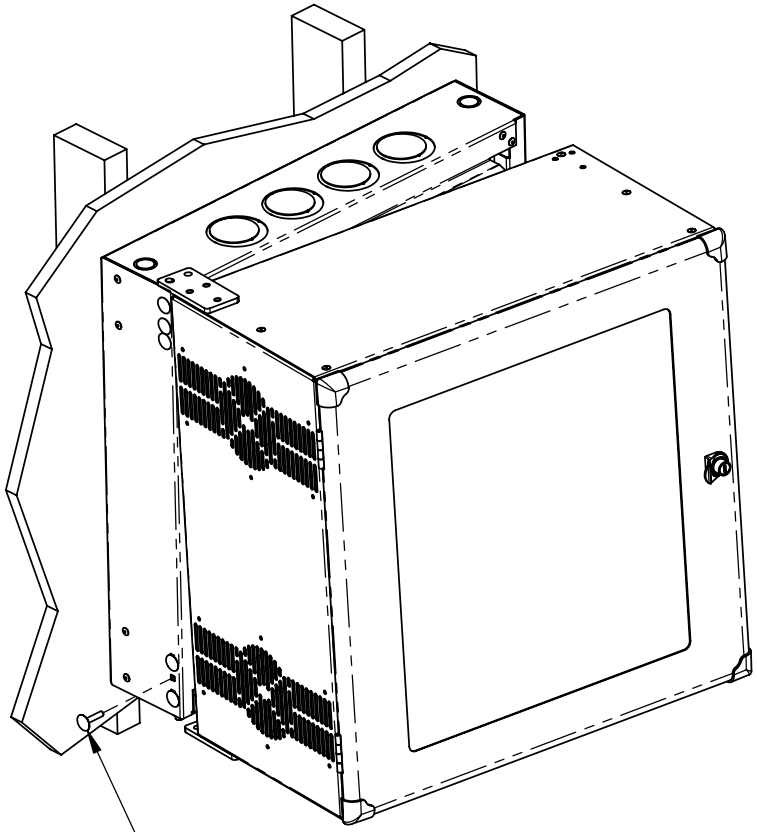

THE CENTER BOLT MUST BE REPLACED TO INSURE THAT THE HINGE PIN DOES NOT SLIP DURING OPERATION

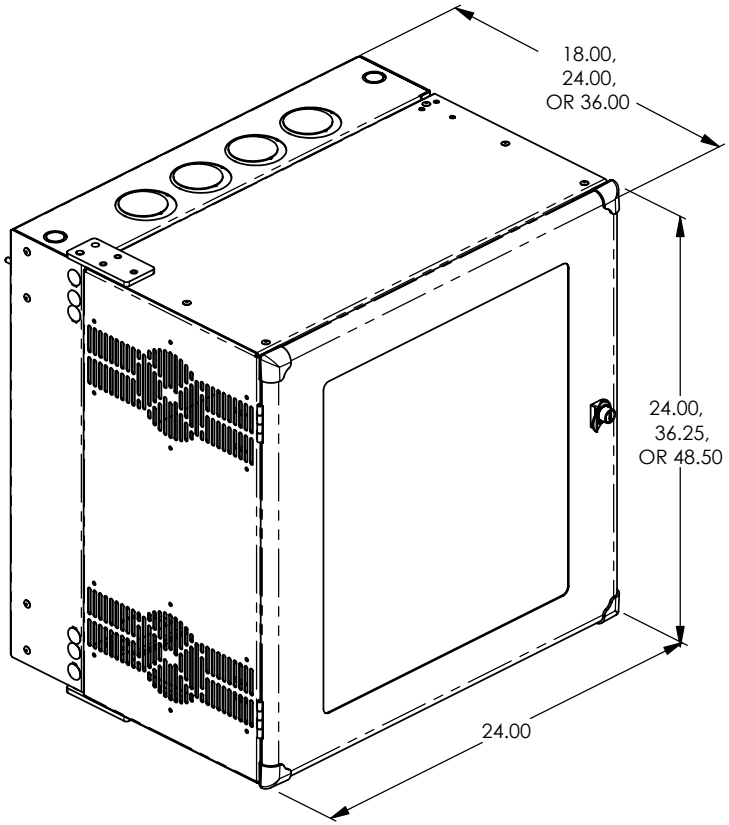

CHATSWORTH PRODUCTS, INC.

INSTALLATION INSTRUCTIONS, CUBE-IT+ CABINET

THIS DRAWING CONTAINS INFORMATION PROPRIETARY TO CHATSWORTH PRODUCTS, INC. ANY REPRODUCTION DISCLOSURE OR USE OF THIS DRAWING IS EXPRESSLY FORBIDDEN EXCEPT AS AGREED TO IN WRITING BY CHATSWORTH PRODUCTS, INC.

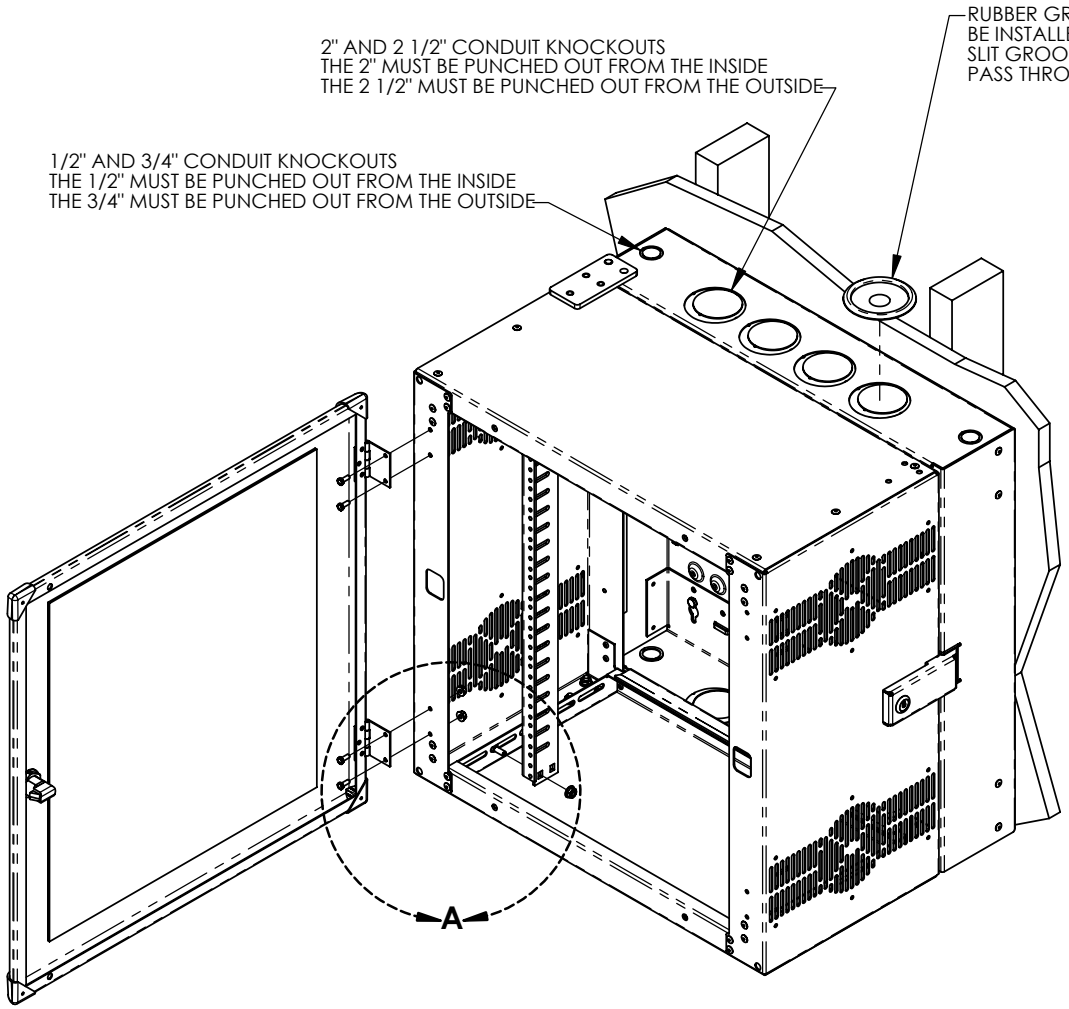

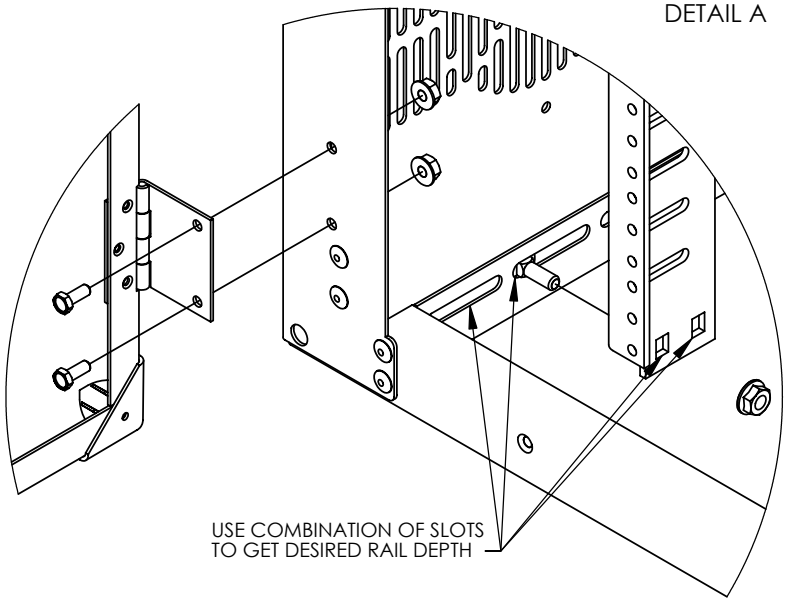

MOUNTING EQUIPMENT RAIL

MOUNTING RAIL DEPTH CAN BE ADJUSTED BY REMOVING NUTS AND MOVING THE RAIL TO THE DESIRED POSITION. USE A COMBINATION OF ONE OF THE TWO SLOTS ON THE RAIL AND ONE OF THE SLOTS ON THE SIDE PANELS.

THE DOOR CAN BE HINGED FROM EITHER SIDE OF THE CABINET.
1. REMOVE THE FOUR SCREWS AND NUTS FROM THE HINGES.
2. TURN THE DOOR OVER.
3. REINSTALL THE SCREWS AND NUTS ON THE OPPOSITE SIDE.

CHATSWORTH PRODUCTS, INC.

INSTALLATION INSTRUCTIONS, CUBE-IT+ CABINET

THIS DRAWING CONTAINS INFORMATION PROPRIETARY TO CHATSWORTH PRODUCTS, INC. ANY REPRODUCTION DISCLOSURE OR USE OF THIS DRAWING IS EXPRESSLY FORBIDDEN EXCEPT AS AGREED TO IN WRITING BY CHATSWORTH PRODUCTS, INC.