Pretium EDGE® HD Solutions

A LANscape® Pretium® Solutions Product

Pretium EDGE® HD Solutions for Enterprise Data Centers and Storage Area Networks

Corning Cable Systems Pretium EDGE® HD Solutions create a fiber optic tip-to-tip solution for Data Centers and Storage Area Networks (SANs) consisting of housings, modules, panels, trunks harnesses, and jumpers.

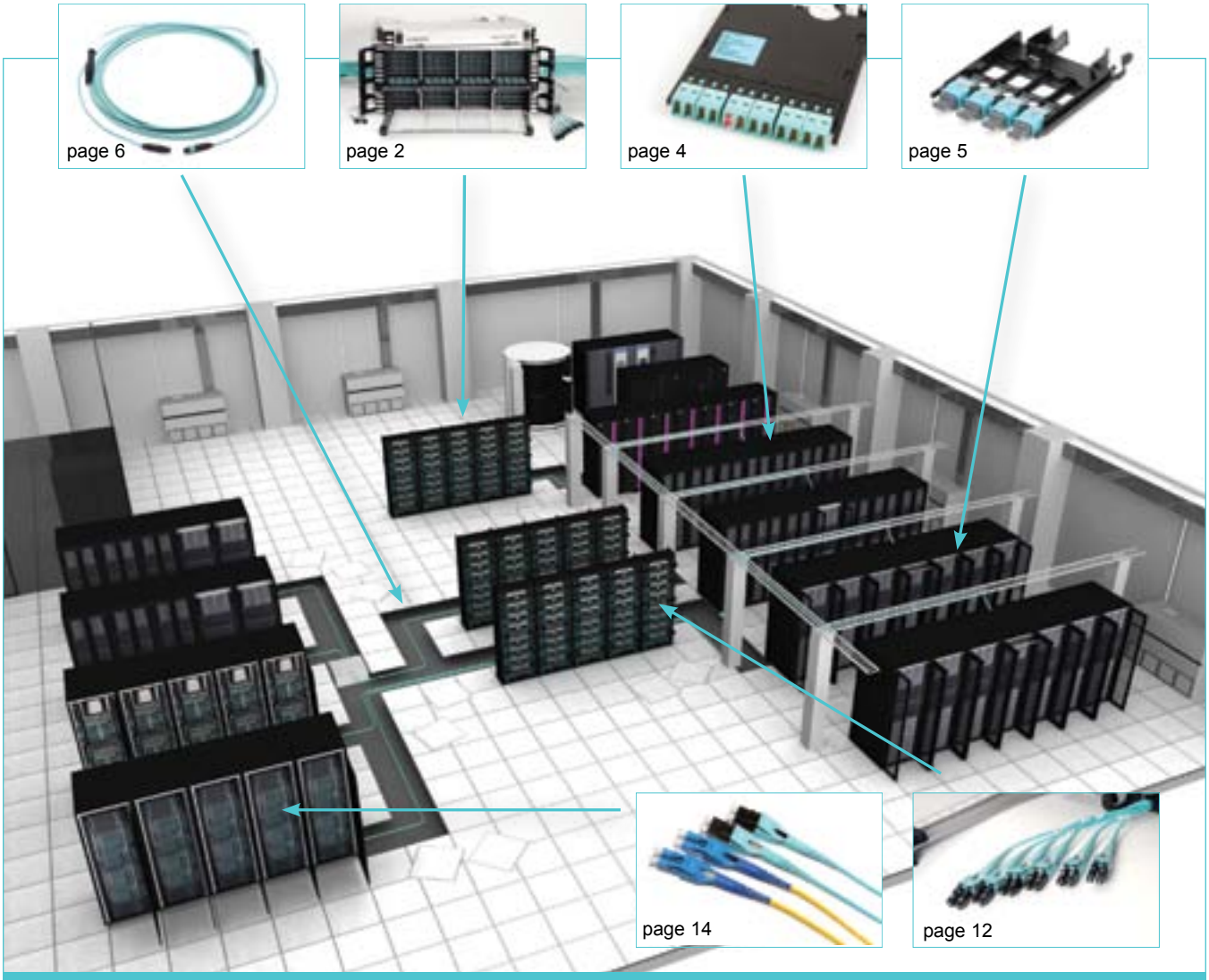

Pretium EDGE Solutions | Photo MM191

CORNING | LANscape® Pretium® Solutions

Pretium EDGE® HD Solutions

A LANscape® Pretium® Solutions Product

features and benefits |

Removable top covers on the 1U and 2U housings	Provide easier access to modules and panels
Pretium EDGE reverse polarity uniboot duplex jumpers	Enables for quick and easy polarity management
Improved mounting brackets	Allow for depth adjustment in the rack
New bracket option for 23-in racks	Offers the ultimate design flexibility
New mounting system	Allows for one-person installation
New snap-in routing guides	Provides easier cable management

Pretium EDGE® HD Solutions

Pretium EDGE HD Solutions are high-density preterminated optical cabling solutions offering industry leading connector density. With unprecedented finger access, there is no need for additional tools enabling faster moves, adds and changes.

Pretium EDGE HD Solutions | Photo LAN2279

specifications |

Insertion Loss (dB) Max		
	OM3/OM4	OS2
Connected Mated Pairs LC	0.15	0.5
MTP® Connector	0.35	0.75
Modules/Harnesses LC	0.5	1.3

Pretium EDGE® HD Solutions

A LANscape® Pretium® Solutions Product

Pretium EDGE® Solutions

Pretium EDGE HD housings are available in 1U, 2U and 4U sizes. Mountable in 19-in racks or cabinets, they provide industry leading high-density connectivity when combined with Pretium EDGE modules, panels, harnesses, trunks and jumpers.

EDGE-01U
EDGE-01U-SP

- Sliding tray tilts to 30 degrees
- Open rear deck allows for easier access for MTPs
- Removable rear strain-relief shelf allows for installation in reduced-depth applications. See hardware accessories for alternate strain-relief options.

EDGE-02U

- Removable back door allows easier access to MTP® Connectors on rear of modules.

EDGE-04U

- Industry-leading fiber density while maintaining unparalleled finger access to jumpers.

EDGE-01U
| Photo LAN1693

EDGE-01U-SP
| Photo LAN2297

EDGE-02U
| Photo LAN2245

EDGE-04U
| Photo LAN2309

specifications and ordering information |

Part Number	Rack Units (RU)	Product Dimensions W x D x H (in)	Package Dimensions W x D x H (in)	Shipping weight (lbs)	Module or Fiber density per unit	Panel Capacity
EDGE-01U	1	17 x 21.95 x 1.75	20.3 x 27 x 7.8	16	96	8
EDGE-01U-SP	1	17 x 19.5 x 1.75*	19 x 22.125 x 7.75	11	144	12
EDGE-02U	2	17 x 24.6 x 3.50	22.3 x 27.4 x 8.4	27	288	24
EDGE-04U	4	17 x 24.6 x 7.00	23.3 x 28.6 x 13	34	576	48

* When rear strain-relief plate is removed, product depth reduces to 14.9-in.

Pretium EDGE® HD Solutions

A LANscape® Pretium® Solutions Product

Modules

The Pretium EDGE® modules provide the interface between the MTP® on the trunk and the LC duplex jumpers that will then connect directly into the electronics. The LC duplex adapters feature hinged VFL-compatible shutters that move up and out of the way when the connector is inserted. Specially designed indents in the shutters ensure that the end faces of the connectors are never touched. These shutters replace the standard dust caps that typically once removed are never replaced, exposing the interior end faces to dust particles and possible damage.

Pretium EDGE Module with VFL-Compatible Shutters
| Photo LAN1545

ordering information |

ECM - UM12 - ☐☐ - ☐☐ ☐

|1 |2 |3

|1

Select LC duplex adapters on front of module.
05 = Multimode OM3/OM4
04 = Single-Mode OS2

|2

Select PINNED MTP® on rear of module.
93 = Multimode
89 = Single-Mode

|3

Select fiber type.
T = OM3
Q = OM4
G = OS2

CORNING | LANscape® Pretium® Solutions

Pretium EDGE® HD Solutions

A LANscape® Pretium® Solutions Product

MTP® Adapter Panels

The Pretium EDGE® MTP® adapter Panels provide a simple interface to mate MTP connectors. This occurs when connecting MTP Trunks to MTP Extender Trunks, MTP Trunks to Trunk Harnesses and in 40G multimode networks when MTP Trunks are connected to 40G Jumpers.

MTP Adapter Panel with 4 MTP Adapters | Photo LAN2695

ordering information |

EDGE - CP □□ - □□
|1 |2

|1

Select fiber count.
24 = 2 MTP Adapters
48 = 4 MTP Adapters

|2

Select fiber type.
E3 = Multimode OM3/OM4
90 = Single-Mode OS2

CORNING | LANscape® Pretium® Solutions

Pretium EDGE® HD Solutions

A LANscape® Pretium® Solutions Product

MTP® Trunks

The Pretium EDGE® MTP® Trunks provide the backbone of the Pretium EDGE Solution. With non-pinned MTPs on both ends of the cable, these trunks are designed to interface with the Pretium EDGE or Plug & Play™ modules. All trunks are shipped with strain-relief clips that allow for the tool-less installation in both Pretium EDGE and Plug & Play housings. These trunks conform to TIA-568 Type-B polarity.

Pretium EDGE MTP Trunks | Photo LAN1550

ordering information |

☐	☐☐☐☐	☐☐	☐	PNDDU -	☐☐☐	F
|1	|2	|3	|4		|5	

|1

Select grip application.

G = Grip on one end
Z = No grips

|2

Select NON-PINNED MTP Connectors.

7575 = Multimode
9090 = Single-Mode

|3

Select standard fiber count.

12
24
48
72
96
E4 = 144

|4

Select fiber type:

T = OM3
Q = OM4
G = OS2

|5

Select cable length in feet:

(Measured from furcation to furcation)
030, 040, 050, 060, 070, 080, 090, 100, 110, 120, 130, 140, 150, 160, 170, 180, 190, 200
Other cable lengths available upon request.

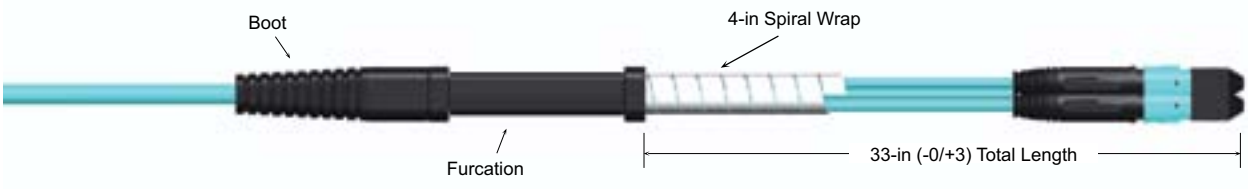

Pretium EDGE Solutions Trunk Cable Configuration | Drawing ZA-3496

CORNING | LANscape® Pretium® Solutions

Pretium EDGE® HD Solutions

A LANscape® Pretium® Solutions Product

MTP® Extender Trunks

The Pretium EDGE® MTP® Extender Trunks provide additional distance for the backbone of the Pretium EDGE Solution. With a non-pinned MTP on one end of the cable, a pinned MTP on the other and a TIA-568 Type-A polarity, these trunks are designed to interface with a Pretium EDGE or Plug & Play™ module and an MTP trunk. All trunks are shipped with strain-relief clips that allow for the tool-less installation in both Pretium EDGE and Plug & Play housings. Most often these extender trunks will be used in a Zone Distribution Area (ZDA).

Pretium EDGE MTP Extender Trunks | Photo LAN1548 and LAN1550

ordering information |

☐	☐☐	☐☐	☐☐	☐	PNCDX	☐☐☐	F
|1	|2	|3	|4	|5		|6	

|1

Select grip application.
G = Grip on one end
Z = No grips

|2

Select PINNED MTP Connector.
93 = Multimode
89 = Single-Mode

|3

Select NON-PINNED MTP Connector.
75 = Multimode
90 = Single-Mode

|4

Select fiber type.
T = OM3
Q = OM4
G = OS2

|5

Select fiber type.
12 72
24 96
48 E4 = 144

|6

Select cable length in feet (Measured from furcation to furcation).
030, 040, 050, 060, 070, 080, 090, 100, 110, 120, 130, 140, 150, 160, 170, 180, 190, 200
Other cable lengths available upon request.

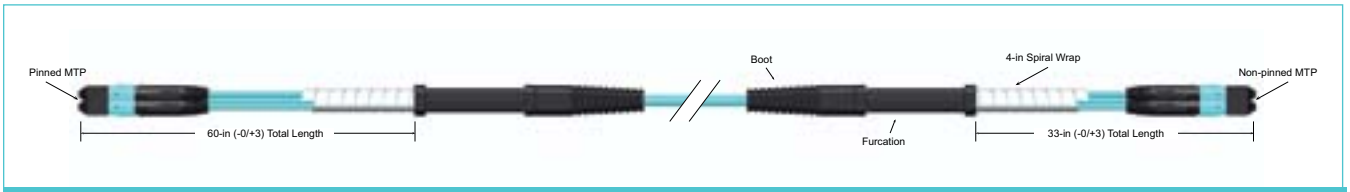

Pretium EDGE Extender Trunk Configuration | Drawing ZA-3869

CORNING | LANscape® Pretium® Solutions

Pretium EDGE® HD Solutions

A LANscape® Pretium® Solutions Product

Hybrid MTP® - LC Duplex Trunks

The Pretium EDGE® Hybrid MTP – LC Duplex Trunks combine non-pinned MTP Connectors that connect to Pretium EDGE modules and duplex uniboot LC connectors that connect directly to electronics enabling more options for cabling your data center.

ordering information |

☐	☐☐☐☐	☐☐	☐	PND	☐	W	☐☐☐	F
|1	|2	|3	|4		|5		|6	

|1

Select grip application.
G = Grip on MTP end
Z = No grip

|2

Select fiber type.
7579 = Multimode
9078 = Single-Mode

|3

Select standard fiber count.

12	72
24	96
48	E4 = 144

|4

Select fiber type.
T = OM3
Q = OM4
G = OS2

|5

Select 2.0 mm LC leg length

J = 12 (-0/+3) in	M = 48 (-0/+3) in
K = 24 (-0/+3) in	N = 60 (-0/+3) in
L = 36 (-0/+3) in – Standard	P = 72 (-0/+3) in

|6

Select cable length in feet (Measured from furcation to furcation).
030, 040, 050, 060, 070, 080, 090, 100, 110, 120, 130, 140, 150, 160, 170, 180, 190, 200

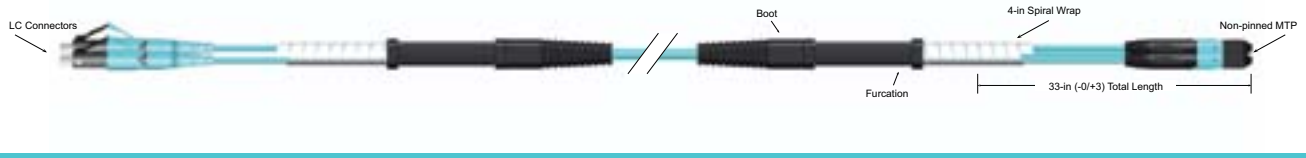

Pretium EDGE Solutions Hybrid Trunk Configuration | Drawing ZA-3870

CORNING | LANscape® Pretium® Solutions

Hybrid MTP® - LC Duplex Extender Trunks

The Pretium EDGE® Hybrid MTP® – LC Duplex Trunks combine pinned MTP Connectors that connect into MTP trunks and duplex uniboot LC connectors that connect directly into electronics providing more options for cabling your data center. These hybrid extender trunks are most often used used in a Zone Distribution Area (ZDA).

ordering information |

□	□□□□	□□	□	PNC	□	Z	□□□	F
|1	|2	|3	|4		|5		|6	

|1

Select grip application.
G = Grip on MTP side
Z = No grip

|2

Select fiber type.
9379 = Multimode
8978 = Single-Mode

|3

Select standard fiber count.

12	72
24	96
48	E4 = 144

|4

Select fiber type.
T = OM3
Q = OM4
G = OS2

|5

Select 2.0 mm LC leg length

J = 12 (-0/+3) in	M = 48 (-0/+3) in
K = 24 (-0/+3) in	N = 60 (-0/+3) in
L = 36 (-0/+3) in – Standard	P = 72 (-0/+3) in

|6

Select cable length in feet (Measured from furcation to furcation).
030, 040, 050, 060, 070, 080, 090, 100, 110, 120, 130, 140, 150, 160, 170, 180, 190, 200
Other cable lengths available upon request.

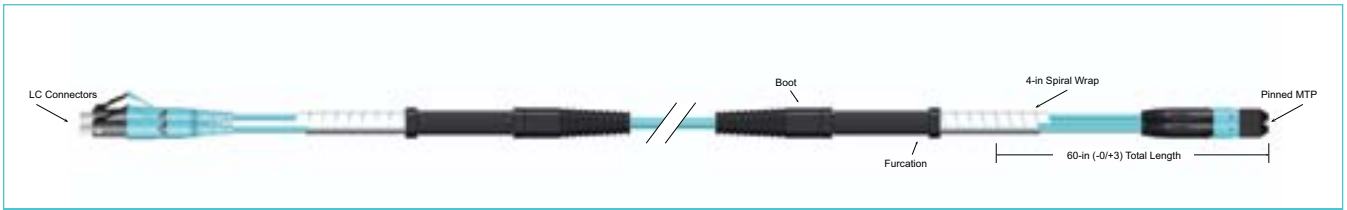

Pretium EDGE Solutions Hybrid Extender Trunk Configuration | Drawing ZA-3871

Pretium EDGE® HD Solutions

A LANscape® Pretium® Solutions Product

trunk specifications |

Cable Ratings/Listings NFPA 262, National Electrical Code® (NEC®), OFNP, CSA FT-6
ICEA S-83-596

Trunk Performance EIA/TIA 568 C.3 – includes low/high temperature soak of -10/60°C, humidity testing at 90-95% at 40°C, connector durability (500 matings), and connector pull testing

Trunks can be pulled up to 100 lbs using the grip.

Fiber Count	Cable Outside Diameter (in)	Pulling Grip Outside Diameter (in)	Strain-Relief Bracket Type	Minimum Conduit Size (in) with 18-in elbow	Cable Weight (lb/1000 ft)	Minimum Bend Radius Loaded (in)	Installed (in)
12	0.22	1.6	1	2.5	21	3.25	1.08
24	0.30	1.6	1	2.5	33	4.55	1.52
36	0.31	1.6	1	2.5	37	4.72	1.57
48	0.33	2.2	2	3.0	42	5.02	1.67
72	0.41	2.2	2	3.0	63	6.20	2.07
96	0.47	2.2	2	3.0	73	7.03	2.34
144	0.49	2.2	2	3.0	81	7.38	2.46

transmission performance |

	OM3 Corning® ClearCurve® Optical Fiber	OM4 Corning ClearCurve Optical Fiber	OS2 Ultra-Bendable Fiber
Fiber Code	T	Q	G
Wavelength (nm)	850/1300	850/1300	1310/1550
Maximum Attenuation (dB/km)	2.8/1.0	2.8/1.0	0.4/0.3
Minimum Effective Modal Bandwidth (MHz•km)	2000/ –	4700/-	N/A
Maximum Link Length per IEEE802.3 at 10G (m)	300	550*	N/A
Maximum Link Length per IEEE802.3 at 40/100G (m)	100	150	

CORNING | LANscape® Pretium® Solutions

trunk shipping information |

Reel Capacities (ft)			
Trunk Fiber Count	Reel A Diameter = 19.5 in Width = 5 in	Reel B Diameter = 19.5 in Width = 12 in	Reel C Diameter = 19.5 in Width = 18 in
12	30-999	N/A	N/A
24	30-700	701-999	N/A
36	30-600	601-999	N/A
48	30-450	451-999	N/A
72	30-300	301-700	701-999
96	30-250	251-400	401-800
144	30-200	201-300	301-650

Note: Trunks under 30 ft are shipped in a cardboard box, not on a reel.

Pretium EDGE® HD Solutions

A LANscape® Pretium® Solutions Product

Module Harnesses

The Pretium EDGE® Module Harness is designed to create a cross-connect point near the electronics by enabling port replication. This is possible with duplex LC connectors to interface with the electronics and a non-pinned MTP® to connect into the back of a module. With port replication, your installation will look the same even after multiple moves, adds, and changes. This can be used in a Horizontal Distribution Area (HDA).

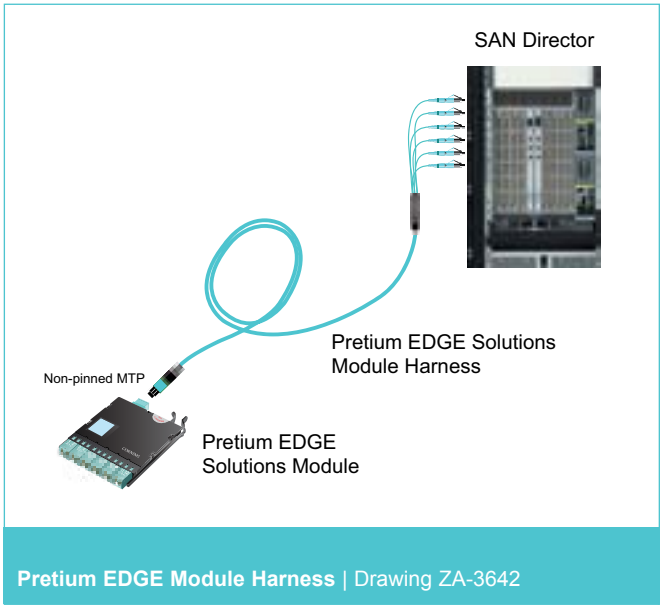

Pretium EDGE Module Harness | Drawing ZA-3642

ordering information |

H	□□□□	12	□	PH -	□	W	0□□	F
	|1		|2		|3		|4	

|1

Select fiber type.
7579 = Multimode OM3/ OM4
9078 = Single-Mode OS2

|2

Select fiber type.
T = OM3
Q = OM4
G = OS2

|3

Select LC leg stagger.
1 = Cisco MDS 9506, 9509 and 9513 48-port blade
2 = Brocade 48000, DCX and DCX-4S 48-port blade
3 = Cisco Nexus 7010 and 7018 32-port blade
4 = Uniform length of 6 inches

|4

Select harness length in feet.
07 = Short harness for adjacent mounting of hardware and electronics
10 = Medium harness for flexible mounting options within cabinet
20 = Long harness for adjacent cabinet mounting
** Harness length is measured from MTP to furcation plug and therefore doesn't include LC leg length*
** Harnesses can be made in 1-ft increments from 3 to 20 ft.*

CORNING | LANscape® Pretium® Solutions

Pretium EDGE® HD Solutions

A LANscape® Pretium® Solutions Product

Trunk Harnesses

The Pretium EDGE® Trunk Harness is designed to facilitate an interconnect point when the electronics are located in a separate area than the cross-connect or patching field. This is possible with duplex LC connectors to interface with the electronics and a pinned MTP® to connect into a trunk. This can be used in an Equipment Distribution Area (EDA).

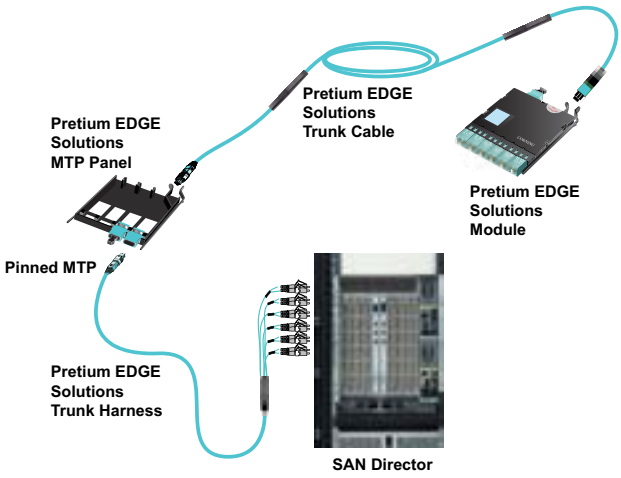

Pretium EDGE Trunk Harness | Drawing ZA-3643

ordering information |

H	□□□□	12	□	PH -	□	Z	0□□	F
	|1		|2		|3		|4	

|1

Select fiber type.
9379 = Multimode OM3/ OM4
8978 = Single-Mode OS2

|2

Select fiber type.
T = OM3
Q = OM4
G = OS2

|3

Select LC leg stagger.
1 = Cisco MDS 9506, 9509 and 9513 48-port blade
2 = Brocade 48000, DCX and DCX-4S 48-port blade
3 = Cisco Nexus 7010 and 7018 32-port blade
4 = Uniform length of 6-in

|4

Select harness length in feet.
07 = Short harness for adjacent mounting of hardware and Electronics
10 = Medium harness for flexible mounting options within cabinet
20 = Long harness for adjacent cabinet mounting
** Harness length is measured from MTP to furcation plug and therefore doesn't include LC leg length*
** Harnesses can be made in 1-ft increments from 3 to 20 ft.*

CORNING | LANscape® Pretium® Solutions

Pretium EDGE® HD Solutions

A LANscape® Pretium® Solutions Product

Reverse Polarity Uniboot Duplex Jumpers

The Pretium EDGE® reverse polarity uniboot duplex jumpers allow for the quick and easy conversion from a TIA-568 A-B polarity to a TIA-568 A-A polarity without exposing the fibers or needing any tools. This jumper comes with a straight-through polarity from the factory but you can convert it to a flipped jumper with no tools. This uniboot design allows one cable to carry both fibers, reducing the jumper bulk when routing.

Pretium EDGE Reverse Polarity Uniboot Duplex Jumpers | Photo LAN2223

ordering information | for riser-rated jumpers

□□	□□	02	□	D120	□□□	M
|1	|2		|3		|4	

|1

Select connector one type.

57 = Multimode (OM3/OM4) SC Duplex
79 = Multimode (OM3/OM4) LC Duplex
78 = Single-Mode (OS2) LC Duplex

|2

Select connector two type.

79 = Multimode (OM3/OM4) LC Duplex
78 = Single-Mode (OS2) LC Duplex

|3

Select fiber type.

T = OM3
Q = OM4
G = OS2

|4

Select length in meters.

Standard lengths are 001, 002, 003, 004, 005, 006, 007, and 010

** Additional lengths and plenum-rated jackets are available upon request.*

Pretium EDGE® HD Solutions

A LANscape® Pretium® Solutions Product

Reverse Polarity Duplex LC Clips

All Pretium EDGE® reverse polarity uniboot LC duplex connectors come with a clip that is removable. We offer a total of 10 colors to allow for easy link identification or fabric segmentation.

Pretium EDGE Reverse Polarity Uniboot LC Duplex Connectors | Photo LAN2254

ordering information | (must order in multiples of 100)

Trigger	-	BP	-	U	☐
					|1

|1

Select Color.

N = Blue
R = Red
E = Orange
B = Black
G = Green
Y = Yellow
K = Beige
R = Rose
C = Slate
A = Aqua

Pretium EDGE® HD Solutions

A LANscape® Pretium® Solutions Product

40G Multimode Jumpers

The Pretium EDGE® 40G multimode jumpers allow for the seamless migration to higher data rates in the data center when used in conjunction with our universal trunks. This jumper is based around pinned or non-pinned 12-fiber MTP® connectors. Pictured here are the three most common applications for this type of jumper to make ordering easier. All three of the jumpers listed have a TIA-568 Type-B polarity.

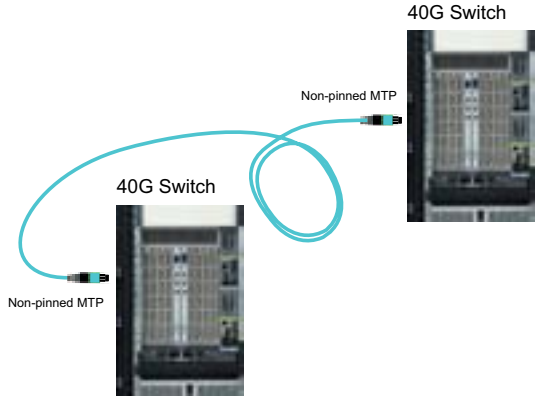

Type 1 | Drawing ZA-3866

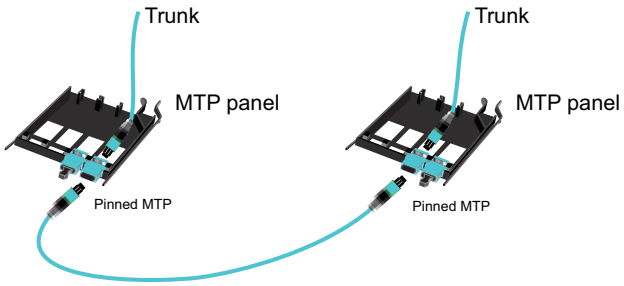

Type 2 | Drawing ZA-3867

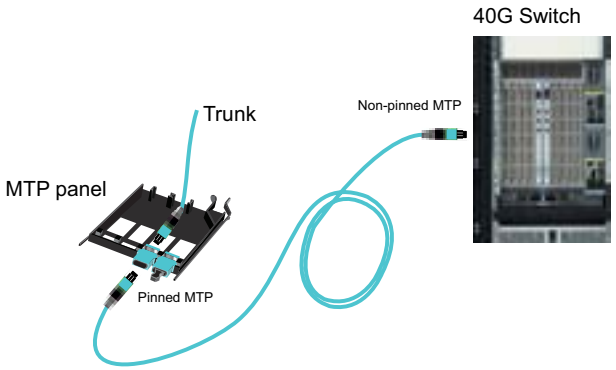

Type 3 | Drawing ZA-3868

ordering information |

Type	Part Number	Description
1	**J757512 ☐ E8-NB010F**	10-ft riser 40G jumper with two non-pinned MTPs
2	**J939312 ☐ E8-NB010F**	10-ft riser 40G jumper with two pinned MTPs
3	**J759312 ☐ E8-NB010F**	10-ft riser 40G jumper with one pinned and one non-pinned MTP

☐ *= T for OM3 or Q for OM4 10 foot is a standard length, other lengths, polarities and plenum-rated options are available upon request.*

CORNING | LANscape® Pretium® Solutions

ordering information |

Accessories

Part Number	Description	
Housing Accessories		
PC1-BKT-23	Bracket for mounting 1U Pretium EDGE® housings into 23-inch racks	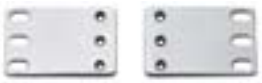
PC2-BKT-23	Bracket for mounting 2U Pretium EDGE housings into 23-inch racks	
PC4-BKT-23	Bracket for mounting 4U Pretium EDGE housings into 23-inch racks	
EDGE-CDF-RJ04-BKT	Rack-mounted strain-relief bracket that holds 4 keyhole or 4 U-clip style strain-relief clips	
EDGE-CDF-RJ08-BKT	Rack-mounted strain-relief bracket that holds 8 keyhole or 8 U-clip style strain-relief clips	
EDGE-CDF-RJ12-BKT	Rack-mounted strain-relief bracket that holds 12 keyhole or 12 U-clip style strain-relief clips	
EDGE-01U-FLSH-BKT	Bracket for mounting a 96- or 144-fiber 1U housing flush to the front rail of a cabinet. Useful in server cabinets with no room between front mounting rail and door.	
EDGE-BKT-WT-2RU	19-inch bracket that attaches to a wire tray that holds 2U worth of housings	
EDGE-BKT-WT-4RU	19-inch bracket that attaches to a wire tray that holds 4U worth of housings	

ordering information |

Accessories

Part Number	Description	
Housing Accessories		
EDGE-BKT-LR-2RU	19-in bracket that attaches to a ladder rack that holds 2U worth of housings	
EDGE-BKT-LR-4RU	19-in bracket that attaches to a ladder rack that holds 4U worth of housings	
EDGE-SMH-SLK	Slack storage/splicing option for Single-Module Housing	

ordering information |

Accessories

Part Number	Description	
Trunk Accessories		
EDGE-DBLSTRN1-10	Pretium EDGE trunk keyhole strain-relief clip for 2 size 1 (12- to 36-fiber) trunks, 10 pack	
EDGE-STRN1-10	Replacement Pretium EDGE trunk keyhole strain-relief clip for 1 size 1 (12- to 36-fiber) trunk, 10 pack	
EDGE-STRN2-10	Replacement Pretium EDGE trunk keyhole strain-relief clip for 1 size 2 (48- to 144-fiber) trunk, 10 pack	
EDGE-CLIP-1-10	Replacement Pretium EDGE trunk U-clip strain-relief clip for 1 size 1 (12- to 36-fiber) trunk, 10 pack	
EDGE-CLIP-2-10	Replacement Pretium EDGE trunk U-clip strain-relief clip for 1 size 2 (48- to 144-fiber) trunk, 10 pack	
Cleaning Accessories		
CLEANER-PORT-LC	LC connector and port cleaning tool	
2104466-01	MTP® connector and port cleaning tool	

Pretium EDGE® HD Solutions

A LANscape® Pretium® Solutions Product

Pretium EDGE® HD Solutions: the definition of innovation

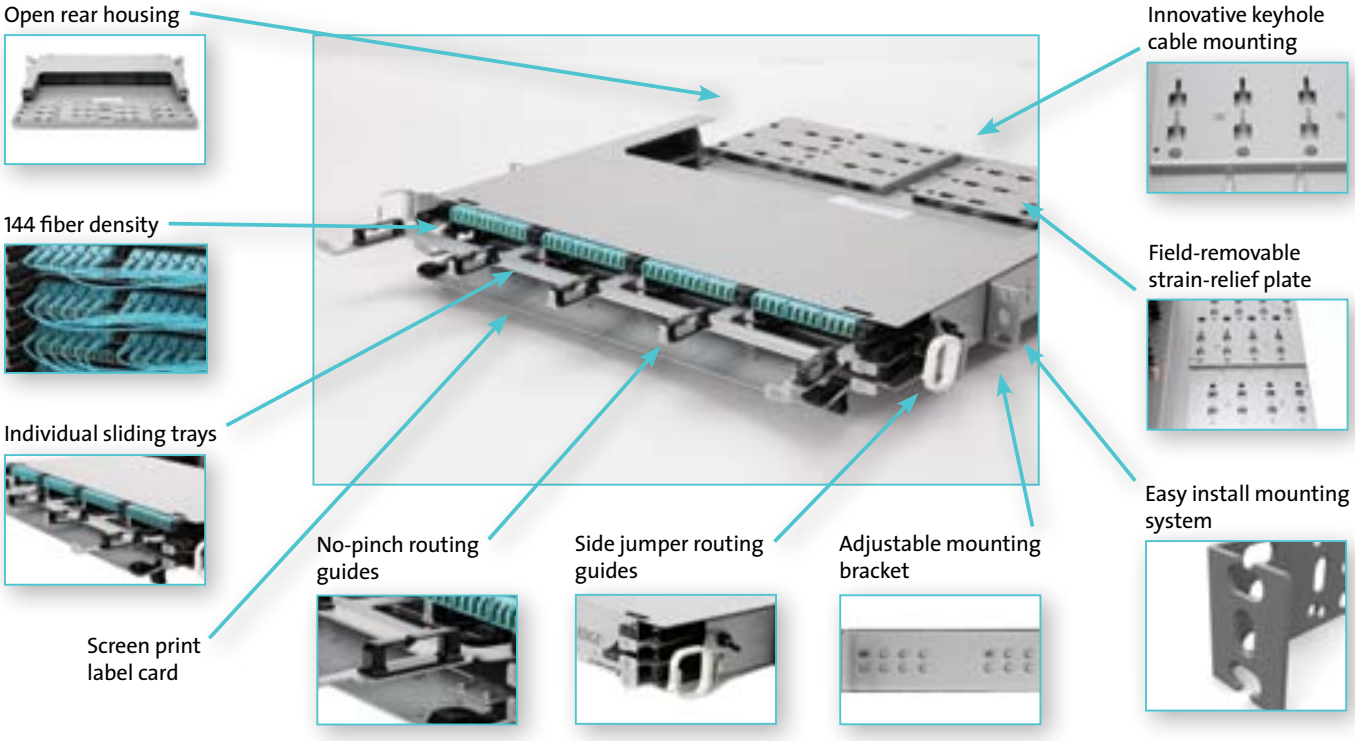

Corning Cable Systems LLC • PO Box 489 • Hickory, NC 28603-0489 USA
800-743-2675 • FAX: 828-325-5060 • International: +1-828-901-5000 • www.corning.com/cablesystems

Corning Cable Systems reserves the right to improve, enhance and modify the features and specifications of Corning Cable Systems products without prior notification. LANscape, Pretium and Pretium EDGE are registered trademarks of Corning Cable Systems Brands, Inc. Plug & Play and Pretium Edge are trademarks of Corning Cable Systems Brands, Inc. ClearCurve and Corning are registered trademarks of Corning Incorporated. MTP is a registered trademark of USConec, Ltd. All other trademarks are the properties of their respective owners. Corning Cable Systems is ISO 9001 certified. © 2009, 2012 Corning Cable Systems. All rights reserved. Published in the USA. LAN-1141-EN / February 2012

CORNING | LANscape® Pretium® Solutions