legrand®

Wiremold

Wireless Enclosures

Secure Enclosures for Wireless Access Points

Wiremold® Wireless Access Point Enclosures provide secure locations for permanently mounting wireless access points recessed in ceilings, vertical surface applications or within Vista™ Architectural Columns. These enclosures conceal the wireless access point, are secure, accommodate a wide variety of leading manufacturers' wireless access points including the Cisco® Aironet 1250 Series, and allow for optimal WiFi signal coverage to adjacent spaces while supporting industry standards POE (power over Ethernet) by virtue of the flexibility in the installation location.

WAPE Wireless Access Point Enclosure installed in a drop ceiling.

Wall-Mounted Nonmetallic Wireless Access Point Enclosure (NME1250AP).

Vista™ Wireless Access Point Enclosure (VLWAP).

VLWAP

Vista™ Wireless Access Point Enclosure

An open space solution is now available for mounting wireless access point units in Vista architectural columns. The Vista Series provides a means for integrating the access points necessary for wireless connectivity into a building's communications infrastructure.

Access points installed in a Vista column can be located to provide optimal WiFi signal coverage in a secure, yet accessible, environment having built-in connectivity and power options.

In addition to the new in-stock product, the wireless access point enclosure is also available as an option with any large frame Vista column configuration to take advantage of the full range of Vista aesthetic and functional capabilities.

For more information on custom configurations, consult the factory.

In-Stock Vista Architectural Column with VLWAP Wireless Access Point Enclosure in a typical office installation.

Interior view of VLWAP shown with wireless access point (sold separately) installed.

FEATURES & BENEFITS

- **Superior signal access**. Vista Wireless Access Point compartment is located 72 [1.8m] inches above the floor to allow for superior radio signal propagation.
- **Reduced signal interference**. Tempered glass panels (gray tint) front and rear, conceal and protect the access point's antennae without compromising signal performance.
- **Security**. Front glass panel is hinged and lockable for accessibility and security. All locksets are keyed alike.
- **Large capacity compartment**. 17 1/2" high x 7 1/4" wide x 2 1/2" [445mm x 183mm x 64mm] deep interior provides space for most leading manufacturers' AP products.
- **Multiple mounting options**. User-configurable mounting system, with supplied brackets and strap hardware, supports a wide variety of mounting configurations.
- **Convenient termination point**. A Wiremold Open System Communication bezel at the compartment top provides a convenient network cabling termination point.
- **On-board power supply.** 20A duplex receptacle in compartment base provides a 120V power supply option for installed devices.
- **UL and cUL Listed.** Listed to U.S. and Canadian safety Standards by Underwriters Laboratories Inc.

Vista Wireless Access Point Enclosure Ordering Information

Catalog No./Item	Description/Specifications
VLWAP	**Vista Wireless Access Point Enclosure –** Vista solution for mounting wireless access points. Large frame Vista with anodized round end channels and center panels. Furniture feed style access, 10'6" [3.2m] tall. Has tempered glass panels to conceal access point. Front panel is hinged and lockable. Compartment measures 17 1/2" x 7 1/4" x 2 1/2" [445mm x 183mm x 64mm].

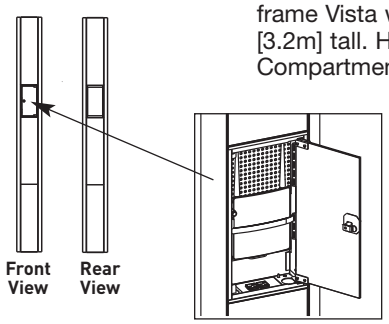

WAPE Series Ceiling Enclosures

For Drop Ceilings

Wiremold® offers a variety of ceiling enclosures for wireless access points. These enclosures provide a secure enclosure to house a wide selection of wireless access points. The ceiling enclosures are plenum rated by UL and may be used in environmental air spaces. These enclosures for active equipment meet all requirements of the TIA/EIA-569-B "Pathways and Spaces" standards.

Application in an air handling space.

FEATURES & BENEFITS

- **Key locks.** Provide added security and safety. All locksets are keyed alike.
- **Suitable for low-voltage and active equipment.** Application versatility
- **High quality construction and design.** Durable aluminum with small exterior dimensions save space in tight areas and can be used in air handling spaces.
- **Connectivity outside of the data room.** Reduced cost of cable configurations.

WAPE Series Ceiling Enclosures Ordering Information

Catalog No./Item	Description/Specifications
WAPE5-BLKIT **WAPE10-BLKIT**	**Wireless Access Point Enclosure –** 5" [127mm] (WAPE5-BLKIT) or 10" [254mm] (WAPE10-BLKIT) deep enclosure for 2' x 2' [610mm x 610mm] drop ceiling tile with blank mounting cover, 12"W x 14"L [305mm x 356mm].

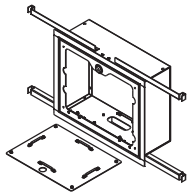

WAPE5-BLKIT

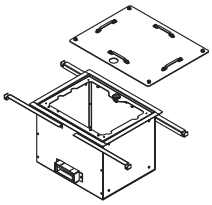

WAPE10-BLKIT

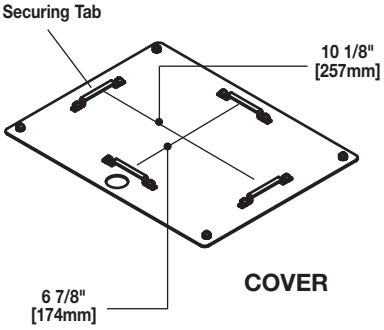

COVER

Catalog No./Item	Description/Specifications
WAPE5-1200KIT **WAPE10-1200KIT**	**Wireless Access Point Enclosure –** 5" [127mm] (WAPE5-1200KIT) or 10" [254mm] (WAPE10-1200KIT) deep enclosure for 2'x2' [610mm x 610mm] drop ceiling tile with faceplate for mounting Cisco® Aironet 1200, 12"W x 14"L [305mm x 356mm].

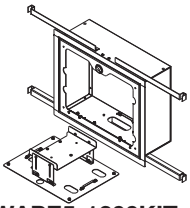

WAPE5-1200KIT

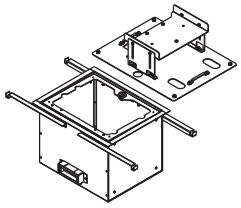

WAPE10-1200KIT

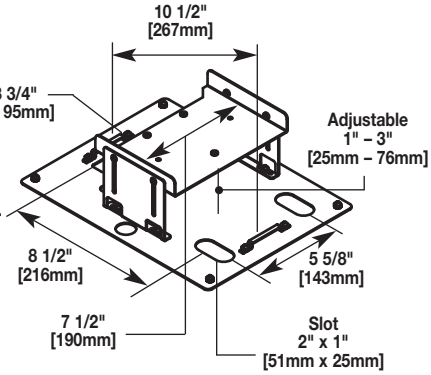

COVER

WAPE Series Ceiling Enclosures Ordering Information (continued)

Catalog No./Item	Description/Specifications
WAPE5-1232KIT **WAPE10-1232KIT**	**Wireless Access Point Enclosure –** 5" [127mm] (WAPE5-1232KIT) or 10" [254mm] (WAPE10-1232KIT) deep enclosure for 2'x2' [610mm x 610mm] drop ceiling tile with faceplate for mounting Cisco® Aironet 1232,12"W x 14"L [305mm x 356mm].
WAPE5-1242KIT **WAPE10-1242KIT**	**Wireless Access Point Enclosure –** 5" [127mm] (WAPE5-1242KIT) or 10" [254mm] (WAPE10-1242KIT) deep enclosure for 2'x2' [610mm x 610mm] drop ceiling tile with faceplate for mounting Cisco® Aironet 1242, 12"W x 14"L [305mm x 356mm].
WAPE5-1250KITD **WAPE5-1250KITR**	**Wireless Access Point Enclosure –** 5" [127mm] deep enclosure for 2' x 2' [610mm x 610mm] drop ceiling tile with faceplate for mounting Cisco® Aironet 1250 Series using dipole antennas (WAPE5-1250KITD) or remote antennas (WAPE5-1250KITR), 13"W x 14"L [330mm x 356mm].

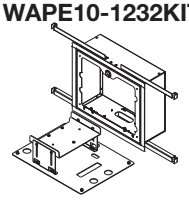

WAPE5-1232KIT

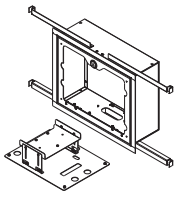

WAPE10-1232KIT

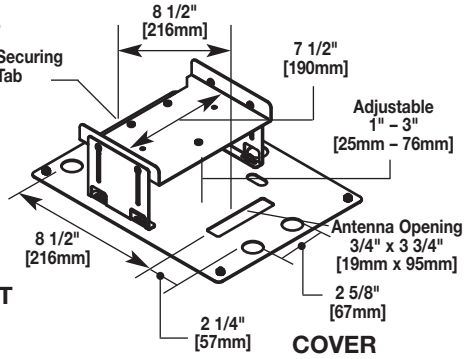

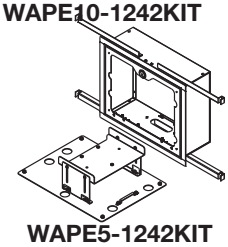

WAPE5-1242KIT

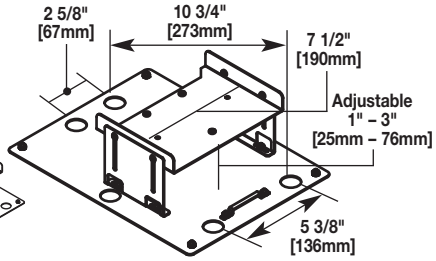

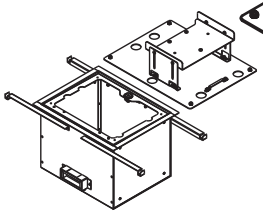

WAPE10-1242KIT

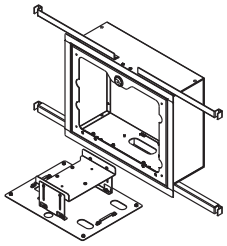

WAPE5-1250KITD

Catalog No./Item	Description/Specifications
WAPE5-UNIKIT **WAPE10-UNIKIT**	**Wireless Access Point Enclosure –** 5" [127mm] (WAPE5-UNIKIT) or 10" [254mm] (WAPE10-UNIKIT) deep enclosure for 2'x2' [610mm x 610mm] drop ceiling tile with universal faceplate, 12"W x 14"L [305mm x 356mm].
WAPE10-DOME	**Wireless Access Point Enclosure w/ Dome Cover –** 3" [76mm] deep enclosure for 2' x 2' [610mm x 610mm] drop ceiling tile. 14" [355mm] diameter by 6 1/2" [165mm] deep nonmetallic transmission dome. Backplate is pre-drilled for the following wireless transmitters: Cisco® Aironet 1200, Intel® 2011, Intermec® WA22, Intermec® 2106, Proxim® Harmony, Proxim® Skyline. Other transmitters may fit but may also require drilling of the backplate.

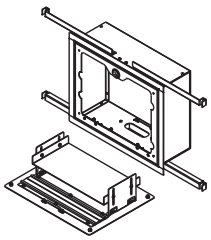

WAPE5-UNIKIT

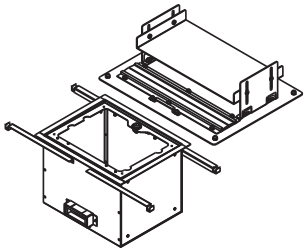

WAPE10-UNIKIT

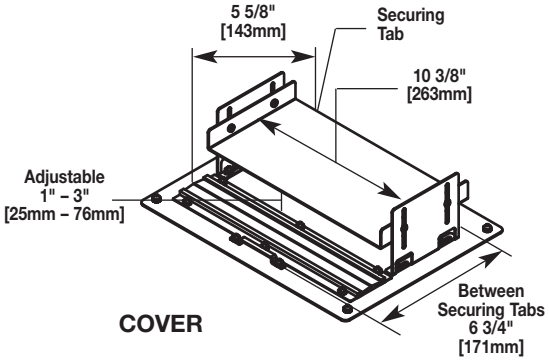

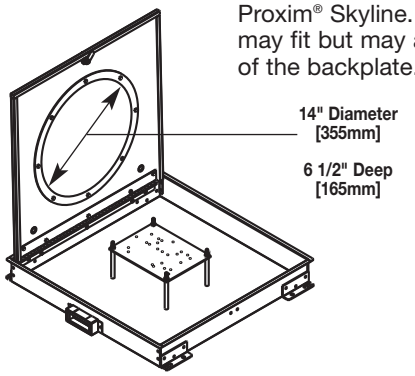

WAPENCL Series Ceiling Enclosures

For Drop Ceilings

Wiremold® WAPENCL Wireless Access Point Ceiling Enclosure provides a secure enclosure for mounting wireless access points into a grid ceiling system. The enclosure provides a permanent location that will accommodate most leading manufacturers' wireless access points.

Designed for easy assembly, the enclosure can be fully assembled into a ceiling tile on a regular work surface before being installed into the overhead ceiling grid system. The cover, which is also removable, has knockouts that can accept a variety of antenna configurations.

The enclosure is constructed of lightweight aluminum and painted with a textured white powder coat finish to blend aesthetically with most ceiling finishes.

Wireless Access Point Ceiling Enclosure installed in ceiling tile. The cover contains knockouts to support a variety of antenna configurations and installable grommets that protect the interior of the enclosure from dust and debris.

FEATURES & BENEFITS

- **Enclosure accommodates most leading brands of access points.** Cover accommodates a variety of access points and antennae configurations. End users remove knockout(s) to support specific wireless access point installations.
- **Lightweight aluminum design**. Installer-friendly and easy to handle during installation.
- **Removable Access door.** Makes it easy to mount the access point and speed installation. Chain safely secures door to enclosure when open.
- **Straps provided for easy mounting.** Multiple openings in door for strap hardware provides installation flexibility.
- **Grommets included to protect unit**. Two grommets are included with each enclosure to cover knockouts being used to protect the interior from dust and debris.
- **Large capacity compartment**. 12" high x 12" wide x 3 7/8" [305mm x 305mm x 96mm] deep interior provides space for most leading manufacturers' AP products, including the Cisco® Aironet 1250 Series.
- **Mounting hardware included**. Four tile lock brackets and adjustable grid lock bars are included for mounting the enclosure to ceiling tile and grid system.
- **Mounting access on frame for code requirements**. Integral attachment points facilitate the connection of suspension cables for additional support for the enclosure where required by building codes.
- **Security lock included**. Key lock secures the enclosure from unauthorized access. All locksets are keyed alike.
- **Powder coat finish**. Standard textured ceiling white finish to complement most office environments.
- **UL and cUL Listed.** Listed to U.S. and Canadian safety Standards by Underwriters Laboratories Inc. Suitable for use in air handling (plenum) spaces.

WAPENCL Series Ceiling Enclosures Ordering Information

Catalog No./Item	Description/Specifications
WAPENCL	**Wireless Access Point Ceiling Enclosure** – Provides a permanent and secure location for mounting wireless access points into a grid ceiling system.

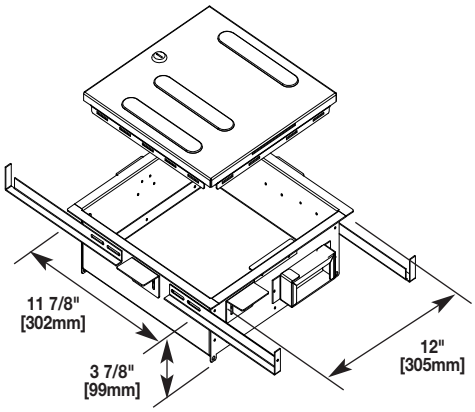

NOTE: *Internal dimensions shown.*

FRONT EXTERIOR DIMENSIONS

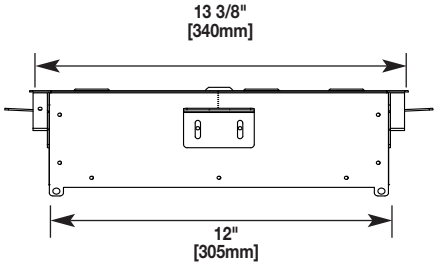

SIDE EXTERIOR DIMENSIONS

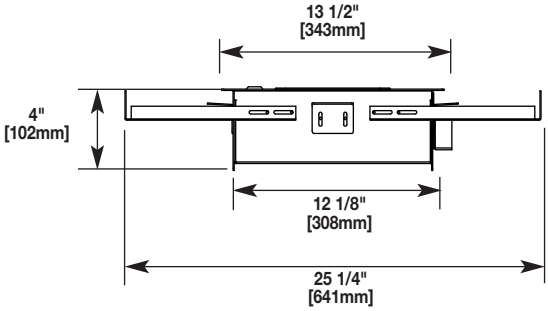

WAPENCL-24-24-4	**Wireless Access Point Ceiling Enclosure** – Provides a permanent and secure location for mounting wireless access points into a grid ceiling system.

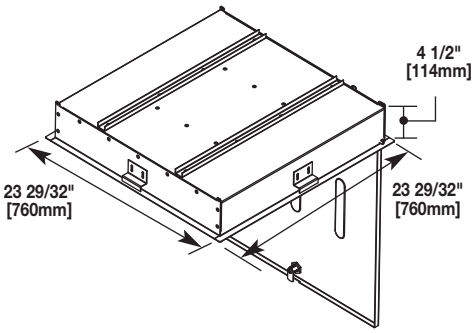

SIDE EXTERIOR DIMENSIONS

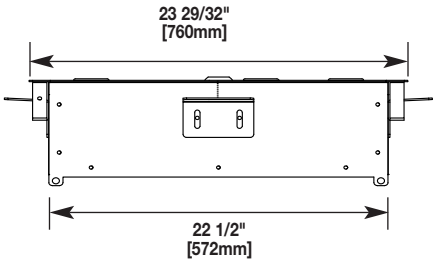

NME1250AP

Wall-Mounted Nonmetallic Wireless Access Point Enclosure

A solution is now available for mounting wireless access points to wall surfaces in an accessible, secure, and aesthetically acceptable manner. The NME1250AP conceals wireless access points in a durable ETL/cETL listed enclosure. Designed to provide a permanent location for wireless connectivity hardware within a building's communications infrastructure, the enclosure can be easily secured to any structure allowing optimal WiFi signal coverage to adjacent spaces while supporting industry standard POE (power over Ethernet).

Interior of NME1250AP with wireless access point (sold separately) installed.

NME1250AP Nonmetallic Access Point Mounting Enclosure Cover with concealed security lock.

FEATURES & BENEFITS

- **Thermoplastic wall construction.** Provides protection for expensive access point hardware and fragile antennae while allowing optimum placement for maximum signal performance.
- **Convenient termination point and raceway connectivity**. Communications cabling can be backfed or surface raceway fed using the integral raceway twistouts provided on all four sides of the enclosure (for Eclipse™ Series PN03, PN05, and PN10 Raceways).
- **Security lock included**. Paintable Fog White in color, the enclosure includes a concealed key lock under a subdoor to prevent unauthorized access. All locksets are keyed alike.
- **Configurability**. Antennas for Cisco® Aironet 1250 can be configured either internal or external to the enclosure.
- **Large capacity compartment**. 13 3/4" high x 7 3/8" wide x 4 5/8" [349mm x 192mm x 117mm] deep interior provides space for most leading manufacturers' AP products, including Cisco® Aironet 1250 Series.
- **Flexible AP installation**. User-configurable access point mounting system, with included strap hardware, supports a wide variety of AP configurations.
- **Multiple mounting options.** Enclosure can be mounted vertically or horizontally using included fasteners for optimum AP orientation.
- **ETL and cETL Listed.** Listed to U.S. and Canadian safety Standards.

NME1250AP Wireless Access Point Enclosure Ordering Information

Catalog No./Item	Description/Specifications
NME1250AP	**Nonmetallic Wireless Access Point Enclosure** – Wall-mounted access point enclosure constructed of durable ETL/cETL thermoplastic. Supports a wide variety of access point configurations for most leading manufacturers of access point products including the Cisco® Aironet 1250 Series.

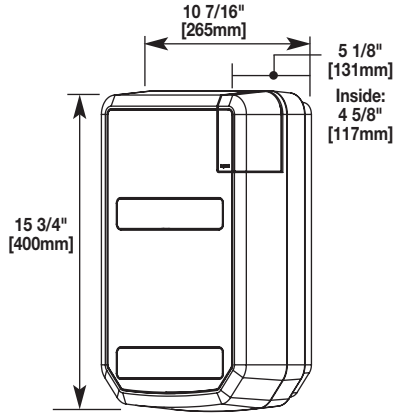

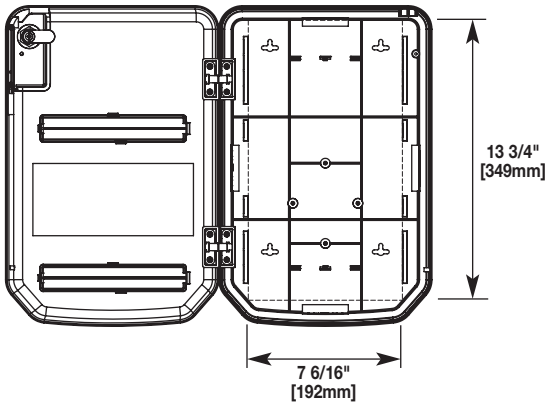

WAPBRKT

Wireless Access Point Mounting Bracket for Overhead Applications

The new Wireless Access Point Mounting Bracket (WAPBRKT) provides a secure support for mounting wireless access points in overhead applications. The bracket can be mounted directly to basket tray or threaded rod, or to threaded rod attached to cable tray. Wireless access points mounted in the Wireless Access Point Mounting Bracket can be located for high visibility, convenience, and optimal WiFi signal coverage.

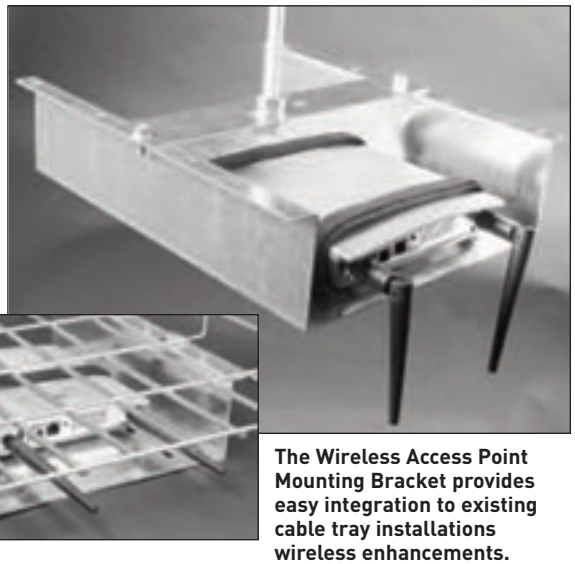

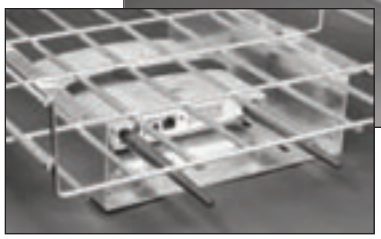

The Wireless Access Point Mounting Bracket provides easy integration to existing cable tray installations wireless enhancements. (threaded rod not included)

FEATURES & BENEFITS

- **Versatile design.** Works with Wiremold and most manufacturers' cable tray applications.
- **Support Bars provided.** Can be attached directly to multiple sizes of threaded rods.
- **Multiple mounting options**. User-configurable mounting system, with included strap hardware, supports a wide variety of mounting configurations.
- **Adaptability**. Multiple openings provided to accommodate most access points available today.
- **Large capacity compartment**. 12 3/4" long x 9 1/2" wide x 3 1/8" [324mm x 241mm x 79mm] deep opening provides space for most leading manufacturers' AP products.
- **Galvanized steel construction.** For maximum strength.

WAPBRKT Wireless Access Point Mounting Bracket Ordering Information

Catalog No./Item	Description/Specifications
WAPBRKT	**Overhead Wireless Access Point Bracket** – Provides secure support for mounting wireless access points in overhead applications.

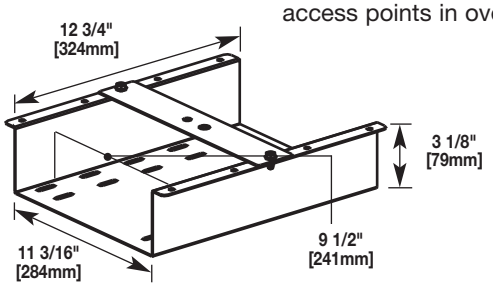

legrand®

Wiremold

WIREMOLD
U.S. and International:
60 Woodlawn Street • West Hartford, CT 06110
1-800-621-0049 • FAX 860-232-2062 • Outside U.S. 860-233-6251
Canada:
570 Applewood Crescent • Vaughan, Ontario L4K 4B4
1-800-723-5175 • FAX 905-738-9721

© Copyright 2010 Legrand/Wiremold All Rights Reserved

ED1553R1 – Updated June 2010 – For latest specs visit www.legrand.us/wiremold