WIREMOLD®

*Walker® Infloor Systems*

# Floor Box and ®Walkerduct Pro Series System Brass Trim Flanges

## Cat. Nos. 817B, 827B, and 837B

## INSTALLATION INSTRUCTIONS

Walker® electrical systems conform to and should be properly grounded in compliance with requirements of the current National Electrical Code or codes administered by local authorities.

All electrical products may present a possible shock or fire hazard if improperly installed or used. Walker electrical products may bear the mark as UL Listed and/or Classified and should be installed in conformance with current local and/or the National Electrical Code.

### Floor Boxes with Slotted Retaining Flanges:

1. Slide head of inverted adjusting screw* into retaining flanges for trim attachment.
2. Place trim ring over the four adjusting screws and tighten until snug using a narrow blade screwdriver. Tighten individual screws in small increments to prevent binding.
3. For tile floors, cut the floor covering around the trim ring or tile up to the ring for a flush appearance. Trim ring may be laid over tile for a flanged look (same as with carpet).
4. For wood floors requiring a flush look, cut an opening (1/8" [3.2mm] deep) conforming to the ring perimeter and recess trim ring into opening.

***NOTES:***

1. *Some floor coverings such as thick carpet may require the use of the longer adjusting screws.*
2. *Hardware bag No. 97650A not needed for this installation.*

**Illustration Shown With 880S1 Omnibox® and 817B Trim Flange Utilizing a Carpet Application.**

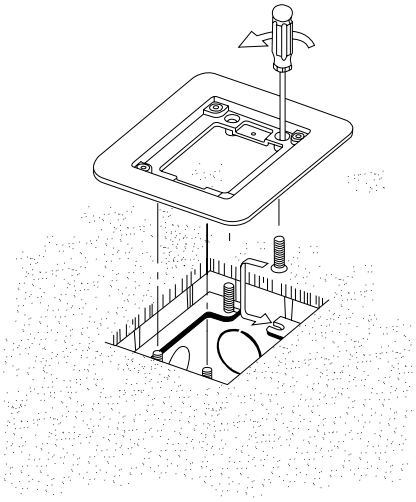

### Floor Boxes with Threaded Retaining Flanges:

1. Secure trim ring to retaining flanges using four flathead screws* provided.
2. For tile floors, cut the floor covering around the trim ring or tile up to the trim ring for a flush appearance. Trim ring may be laid over tile for a flanged look (same as with carpet).
3. For wood floors requiring a flush look, cut an opening (1/8" [3.2mm] deep) conforming to the ring perimeter and recess trim ring into opening.

***NOTE:** Hardware bag No. 97650A needed for this installation.*

**Illustration Shown With 827B Trim Flange Utilizing a Flush Tile Floor.**

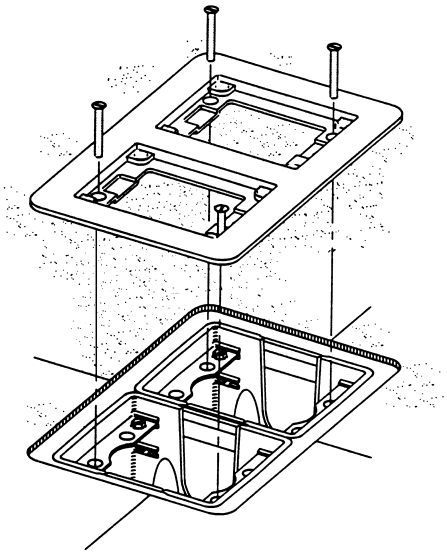

## ®Walkerduct Pro Series Presets:

**1.** Use a Walker insert finder (Cat. No. 480) or other electronic locator to find center of preset. Cut and remove carpeting or tile over preset. (Carpet may be saved for later abandoning.) Chip out concrete exposing mudcap.

***NOTE:*** *If presets are more than 1/2" [12.1mm] below concrete, use of a hammer drill with 1/2" chisel is recommended. Be careful not to damage preset!*

**2.** ***Remove Mudcap: (See Figure 1).***
- A. Strike blade of screwdriver or 1/4" [6.4mm] cold chisel along side of mudcap as shown. Top edge of mudcap will deflect inward.
- B. Pry out cap with screwdriver by positioning blade between preset wall and deflected edge of mudcap, or, use pliers to grab edge of cap and lift out. **Remove all debris from preset.**
- C. Grout around opening if concrete does not break away cleanly.

**3.** ***Remove Knockout: (See Figure 2).***
- A. Insert screwdriver blade into opening in base of preset. Push screwdriver toward center of preset, breaking tabs. Position screwdriver into opening on other side of knockout and break tabs to release knockout.
- B. Inserting a wire hook into arched opening at center of preset will prevent knockout from falling into duct. **Remove all debris from raceway.**

**CAUTION:** **Some sharp edges may occur along knockout tabs. These must be deburred.**

**4.** **Important!** Tighten bonding screw in base of preset.

- A. Pull wires to preset and leave slack.
- B. Use Cat. No. 427 Fiber Optic Loop Kit if fiber optic cable is being installed.

**5.** Attach trim flange (see Figure 3).
- A. Using hardware bag 97650A secure link strap to posts in preset.
- B. Install two flathead screws in opposite corners to attach flange to link straps. Two lengths of screws are provided to accommodate variations in concrete pour depth.

**6.** Make splices in preset and pull wire thru connector to final termination.
- A. Wire UL Listed device or telecommunication devices and attach to trim flange.
- B. Attach cover plates and complete installation as shown.

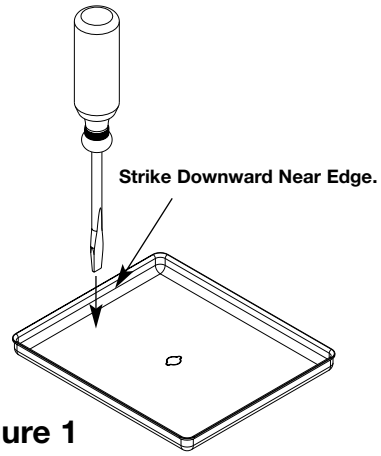


**Figure 1**

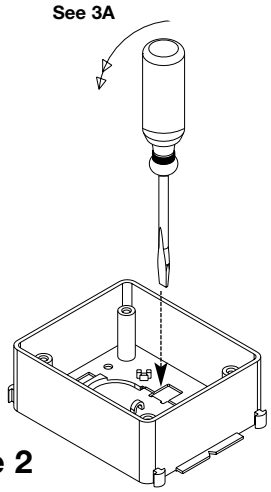


**Figure 2**

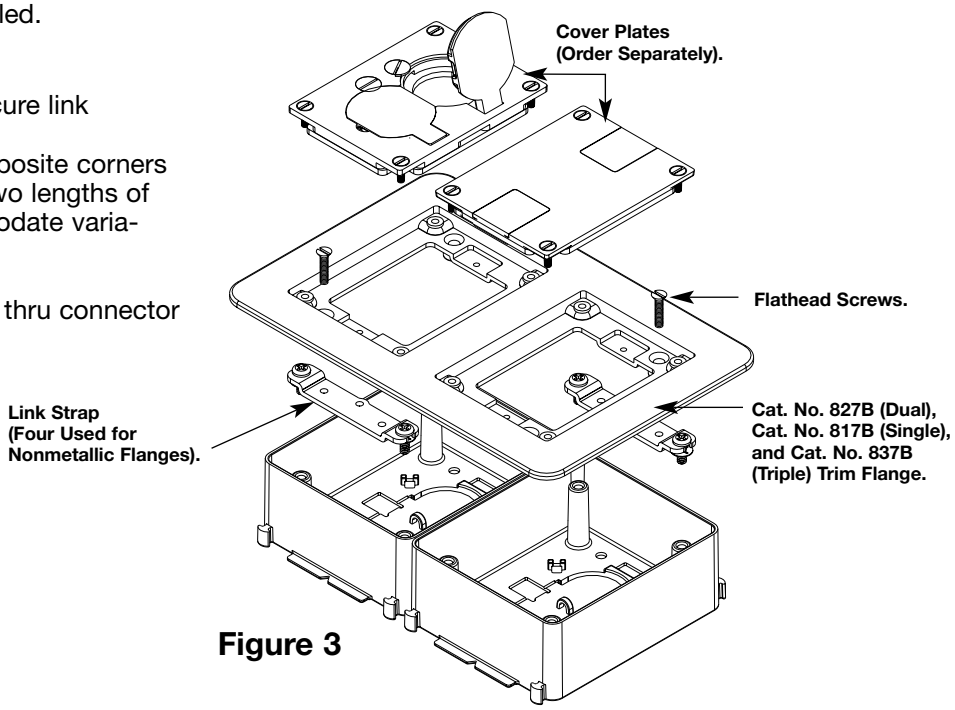


**Figure 3**

***Walker Systems, Inc.***
***1000 Innovation Drive, Williamstown, WV 26187***

© Copyright 2000 The Wiremold Company All Rights Reserved