THIS DRAWING IS UNPUBLISHED. RELEASED FOR PUBLICATION –,– .
© COPYRIGHT – BY TYCO ELECTRONICS CORPORATION. ALL RIGHTS RESERVED.

LOC	DIST
IK	2

PROJECT NR.: E93-52605

REVISIONS

P	LTR	DESCRIPTION	DATE	DWN	APVD
	0	NEUE ZEICHNUNG	26MAY97	M.D	M.D
	A1	1.8mm ABSATZ HINZU	22APR98	M.S	M.D
	A2	UPDATED DRAWING	03-11-05	M.P	J.S

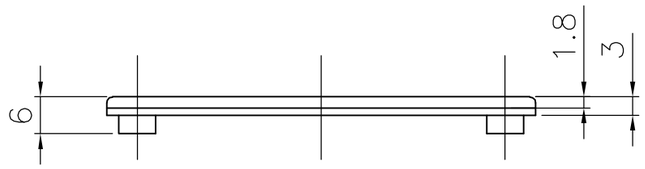

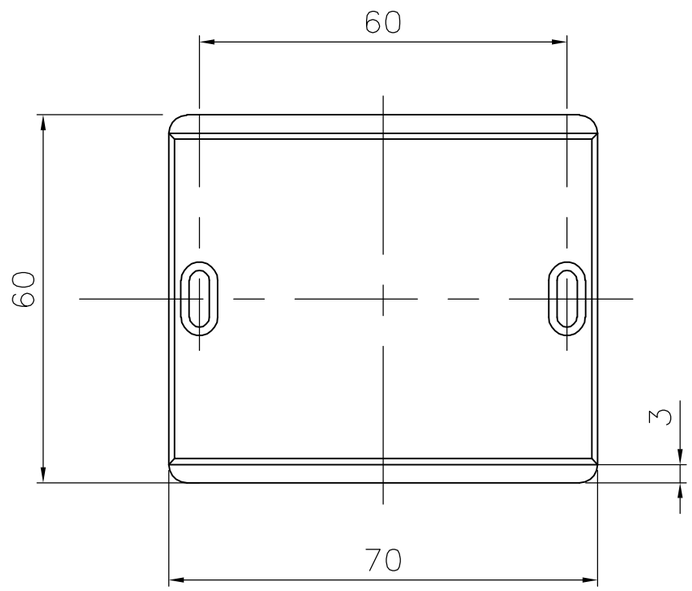

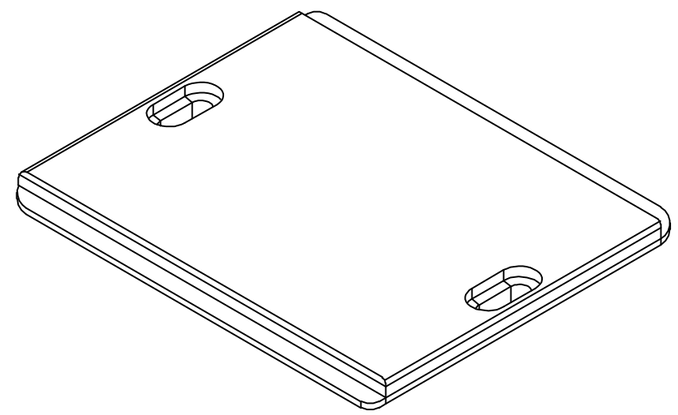

PACKING UNIT:

10 PIECES PACKED INTO POLYBAG. PRINTED WITH AMP-PN 964 719-1: 10 BAGS PACKED INTO CARDBOARD BOX

VERPACKUNGSEINHEIT:

10 TEILE IN KUNSTSTOFFBEUTEL VERPACKT UND MIT AMP-PN BEDRUCKT: 10 BEUTEL IN KARTON VERPACKT

AMP ORDER NO. BESTSELL-NR.	POS.	STÜCK	BENENNUNG EINZELTEIL	WERKSTOFF	OBERFLÄCHE / FARBE
964719-1	–	–	– –	– –	– –
	1	1	BLINDCOVER BLINDABDECKUNG	PC	RAL 1013/PEARL WHITE RAL 1013/PERLWEISS

THIS DRAWING IS A CONTROLLED DOCUMENT.

DIMENSIONS: mm

TOLERANCES UNLESS OTHERWISE SPECIFIED:
0 PLC ± –
1 PLC ± –
2 PLC ± –
3 PLC ± –
4 PLC ± –
ANGLES ± –

MATERIAL: PC

FINISH: –

DWN M.PANADERO 03-11-05
CHK R.MATEO 03-11-05
APVD J.SANABRA 03-11-05
PRODUCT SPEC –
APPLICATION SPEC –
WEIGHT –

CUSTOMER DRAWING

tyco Electronics

Tyco Electronics AMP España
Barcelona, Spain.

NAME: ENDABDECKUNG –

SIZE	CAGE CODE	DRAWING NO	RESTRICTED TO
A3	00779	C-964719	–

SCALE 1:1 SHEET 1 OF 1 REV A2