THIS DRAWING IS UNPUBLISHED. RELEASED FOR PUBLICATION 2011
© COPYRIGHT 2010 Tyco Electronics AMP España, S.A.U. ALL RIGHTS RESERVED.

LOC	DIST
IK	2

REVISIONS

P	LTR	DESCRIPTION	DATE	DWN	APVD
	A	DRAWING RELEASED	26APR2010	LC	JS
	A1	NOTE 3 UPDATED	04APR2011	LC	JS

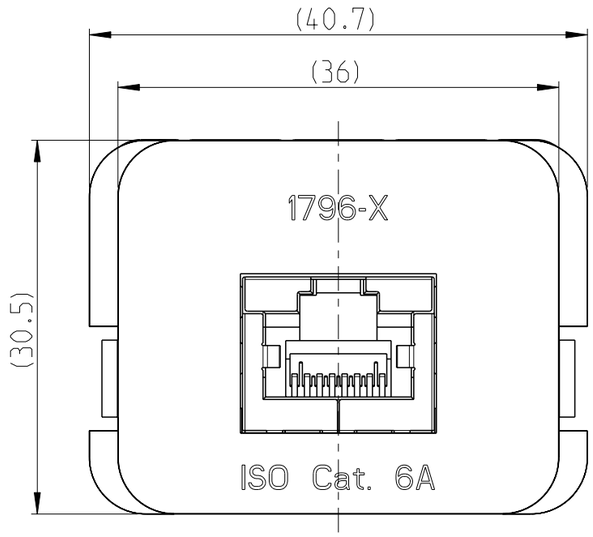

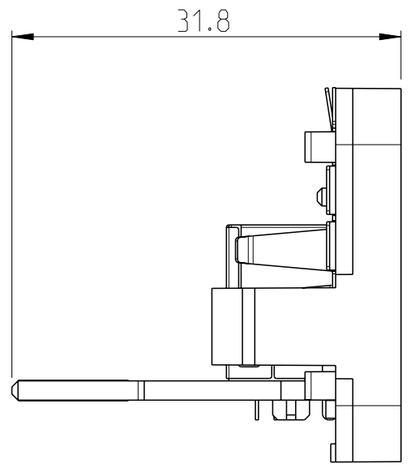

1. MATERIAL:
   PRINTED CIRCUIT BOARD-
   LAMINATED PLASTIC SHEET, 1.57mm THICK
   PRINTED CIRCUIT FINGERS-
   GOLD PLATED MIN. 0.5 µm THICK OVER
   MIN. 1.27 µm THICK NICKEL PLATED
   ADAPTER-
   ABS MOULDING COMPOUND, SEE TABLE
   SHIELD-
   MIN. 2.54 µm THICK TIN OVER
   0.25mm THICK BRASS

2. THIS INSERT IS DESIGNED TO MATE WITH EDGE CONNECTOR, WALLBOX AND PANEL KITS, AMP CO

3. THIS INTERCONNECT MEETS THE REQUIREMENTS OF IEC 603-7;
   COMPATIBLE WITH RJ12 PLUGS (6 POSITIONS 6 CONDUCTORS, 6P6C),
   NOT COMPATIBLE WITH RJ11 PLUGS (6P2C) OR 8P6C PLUG CONFIGURATIONS

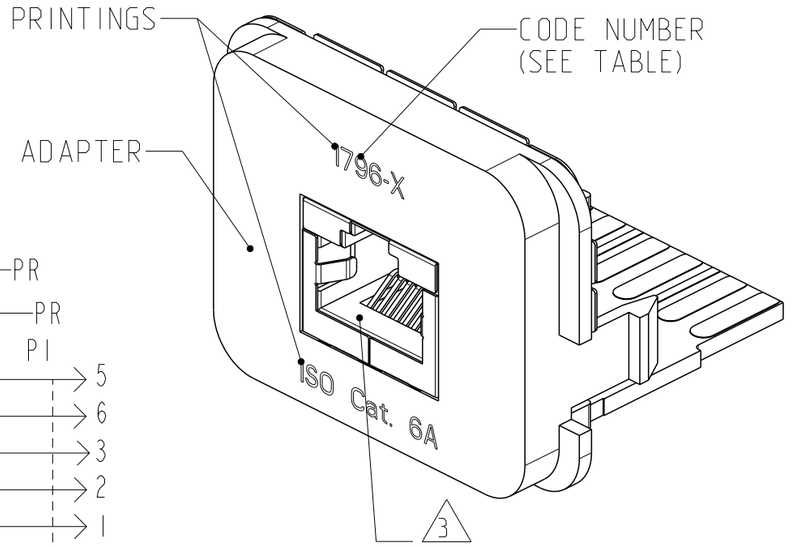

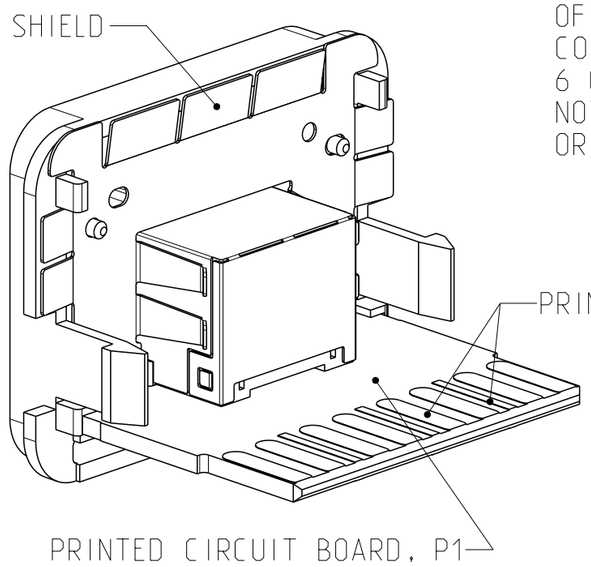

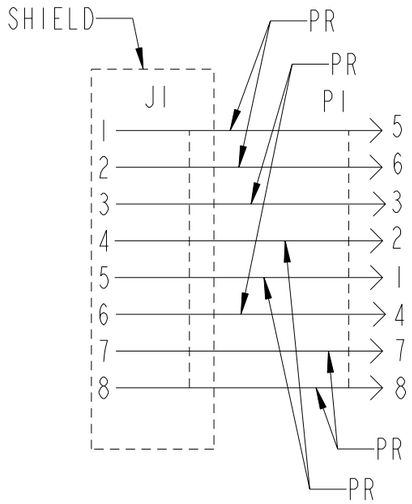

ELECTRICAL SCHEMATIC

1796-5	BLACK	WHITE	1711796-5
1796-3	WHITE	BLACK	1711796-3
1796-1	BLACK	ALMOND	1711796-1
CODE NUMBER	PRINTINGS COLOUR	ADAPTER COLOUR	PART NUMBER

THIS DRAWING IS A CONTROLLED DOCUMENT.

DIMENSIONS: mm

TOLERANCES UNLESS OTHERWISE SPECIFIED:
0 PLC ±-
1 PLC ±0.3
2 PLC ±-
3 PLC ±-
4 PLC ±-
ANGLES ±-

MATERIAL -
FINISH -

DWN L. COBACHO 23APR2010
CHK A. PUELL 26APR2010
APVD J. SANABRA 26APR2010
PRODUCT SPEC 108-93039
APPLICATION SPEC -
WEIGHT -

TE Connectivity

NAME INSERT CAT6a 1x RJ45 T568A AMP CO -

SIZE	CAGE CODE	DRAWING NO	RESTRICTED TO
A3	---	C-1711796	-

CUSTOMER DRAWING | SCALE 2:1 | SHEET 1 OF 1 | REV A1

1470-19 (3/11)

Pro/ENGINEER DRAWING