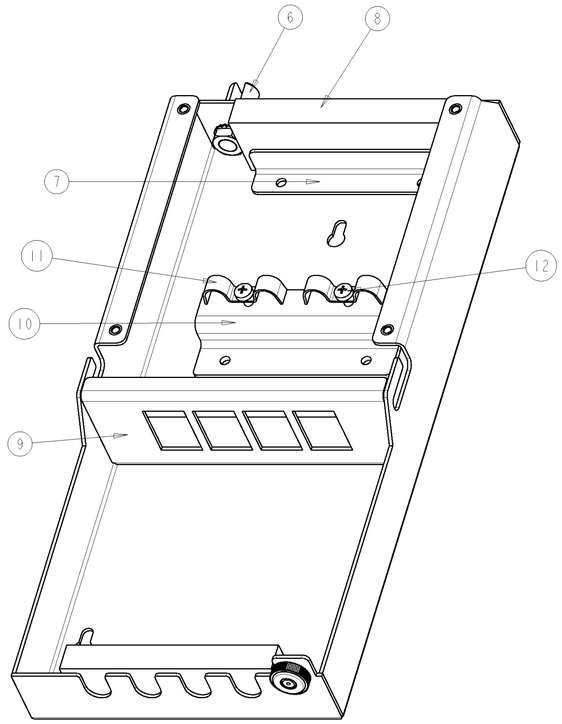

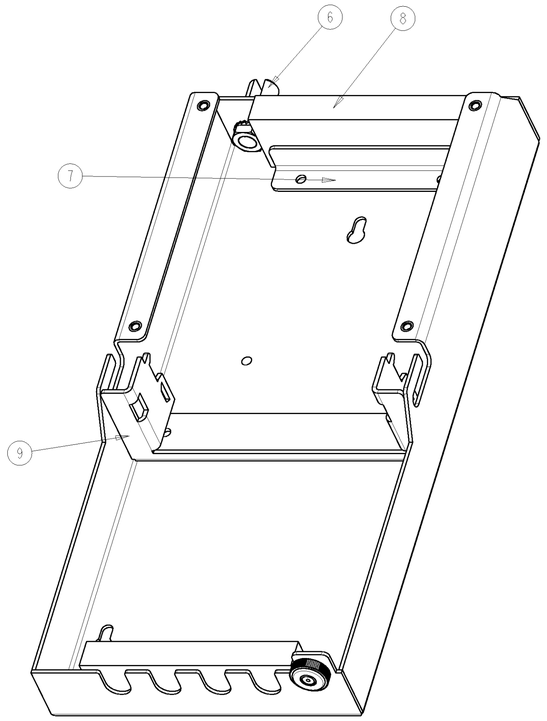

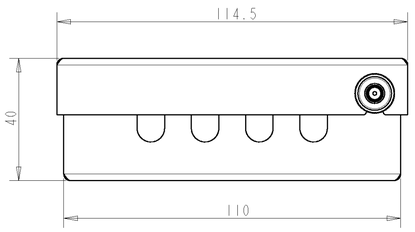

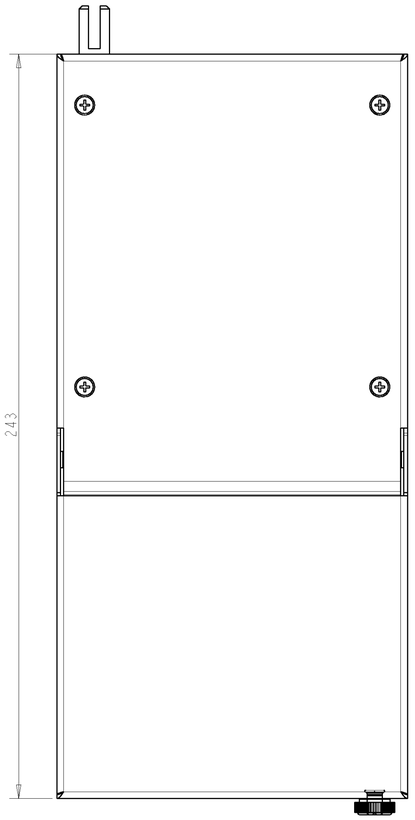

QTY	DESCRIPTION	ITEM
2	SREW M3x12	12
2	CABLE CLAMP LARGE	11
1	CP CABLE RETENSION BRACKET	10
1	CP PATCH PANEL 4 Port Twist / SL Jack	9
4	Cellular Closed Cell Foam (80x25x10)	8
2	CP L - BRACKET	7
1	GROUNDING SCREW	6
1	KNURLED NUT M5	5
4	SCREW M3x6 DIN 965-H BLACK	4
1	CP HINGE COVER	3
1	CP FIXED COVER	2
1	CP BASE	1

AMP part N° : 1-1671163-1

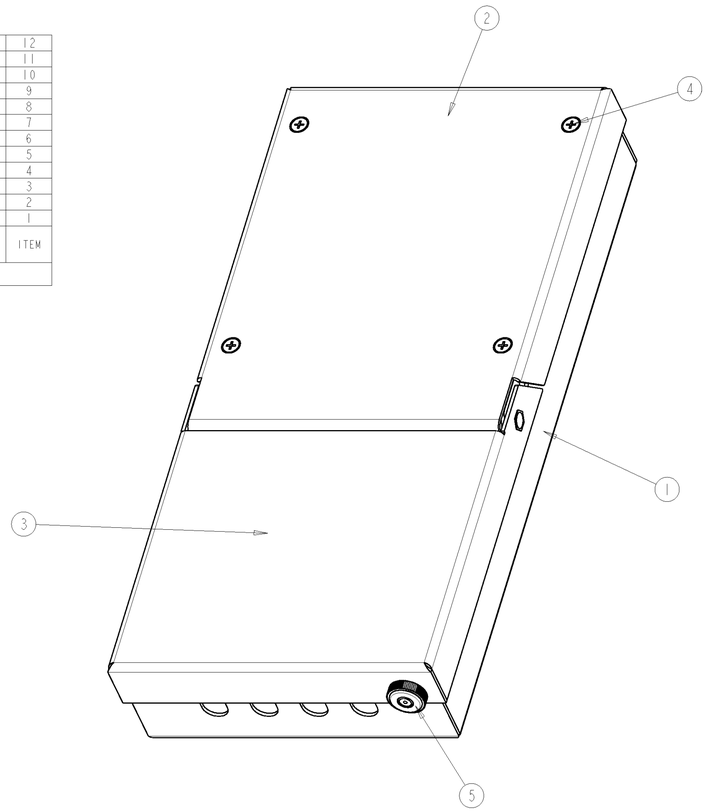

QTY	DESCRIPTION	ITEM
4	SELF TAPPING SCREW NOT SHOWN ON DRAWING, PACKED IN PLASTIC BAG	12
2	SHIELDED EDGE CONNECTOR MARKII NOT SHOWN ON DRAWING, PACKED IN PLASTIC BAG	11
1	AMP CO DOUBLE HOUSING 180° VERSION NOT SHOWN ON DRAWING, PACKED IN PLASTIC BAG	10
1	CP PATCH PANEL DUAL HOUSING ACO	9
4	Cellular Closed Cell Foam (80x25x10)	8
2	CP L - BRACKET	7
1	GROUNDING SCREW	6
1	KNURLED NUT M5	5
4	SCREW M3x6 DIN965-H BLACK	4
1	CP HINGE COVER	3
1	CP FIXED COVER	2
1	CP BASE	1

AMP part N° : 1-1671163-4

PART NUMBER	DESCRIPTION	ITEM
2-1671163-4	CP 2 Dual Housing ACO	4
2-1671163-1	CP 12 Port Twist / SL Jack	3
1-1671163-4	CP 1 Dual Housing ACO	2
1-1671163-1	CP 4 Port Twist / SL Jack	1

CUSTOMER DRAWING AMP part N° : 1671163

DRAWING STATUS: RELEASED

REVISION DESCRIPTION: - Product line extension -

DRAWING BY — NAME: H. BLEUS — DATE: 23-AUG-07

DRAWING REVISION BY — NAME: R. VANDOREN — DATE: 13-JUN-08

VOLUME in mm³: 254680

SCALE: 1.000

DRAWING FORMAT: A1

ISO-SYMBOL

GENERAL TOLERANCE

DRAWING TITLE: **CONSOLIDATION POINT**

Tyco Electronics

TYCO/Electronics - Raychem N.V.
DIESTSESTEENWEG 692
B-3010 KESSEL-LO, BELGIUM

DRAWING_SHEET_REVISION NUMBER: D_0016373_01_AB

REVISION: AB

THIS DRAWING AND INFORMATION SET FORTH HEREON ARE THE PROPERTY OF TYCO/Electronics/Raychem N.V. AND ARE TO BE HELD IN TRUST AND CONFIDENCE. PUBLICATION, DUPLICATION, DISCLOSURE OR USE FOR ANY PURPOSE NOT EXPRESSLY AUTHORIZED IN WRITING BY TYCO/Electronics IS PROHIBITED.

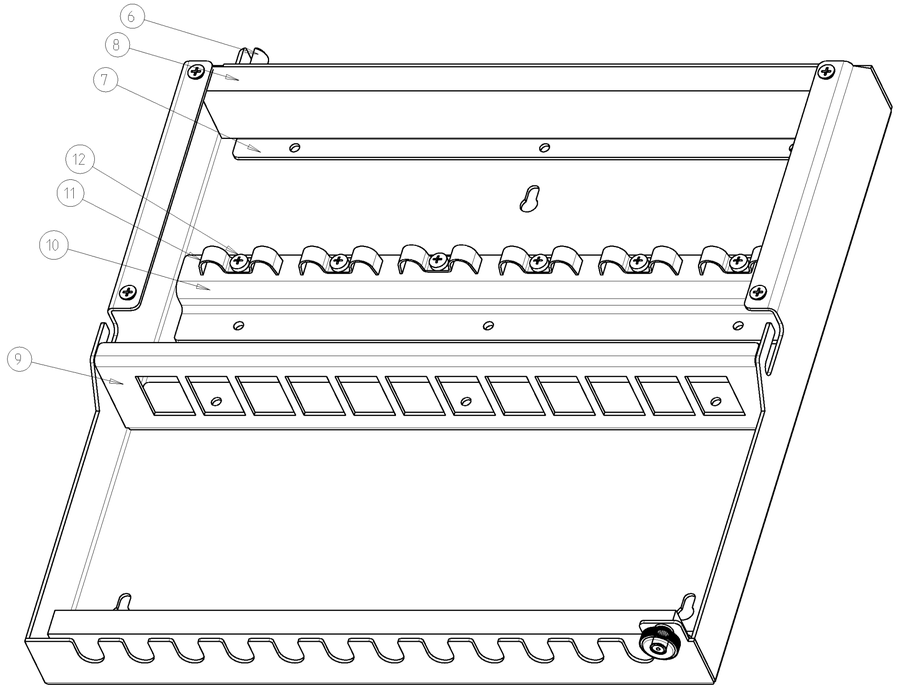

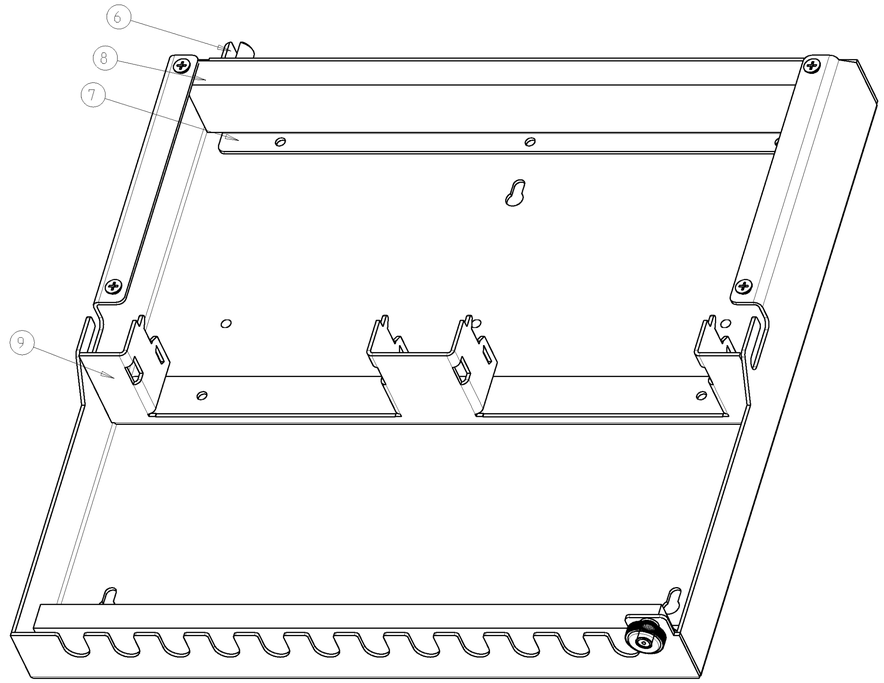

QTY	DESCRIPTION	ITEM
6	SCREW M3x12	12
6	CABLE CLAMP LARGE	11
1	CP 12 PORT CABLE RETENSION BRACKET	10
1	CP 12 PORT PATCH PANEL 4 Port Twist / SL Jack	9
4	Cellular Closed Cell Foam (220x25x10)	8
2	CP12 PORT L - BRACKET	7
1	GROUNDING SCREW	6
1	KNURLED NUT M5	5
4	SCREW M3x6 DIN 965-H BLACK	4
1	CP 12 PORT HINGE COVER	3
1	CP 12 PORT FIXED COVER	2
1	CP 12 PORT BASE	1

AMP part N° : 2-1671163-1

QTY	DESCRIPTION	ITEM
8	SELF TAPPING SCREW NOT SHOWN ON DRAWING. PACKED IN PLASTIC BAG	12
4	SHIELDED EDGE CONNECTOR MARK11 NOT SHOWN ON DRAWING. PACKED IN PLASTIC BAG	11
2	AMP CO DOUBLE HOUSING 180° VERSION NOT SHOWN ON DRAWING. PACKED IN PLASTIC BAG	10
1	CP PATCH PANEL 2 DUAL HOUSINGS	9
4	Cellular Closed Cell Foam (220x25x10)	8
2	CP12 PORT L - BRACKET	7
1	GROUNDING SCREW	6
1	KNURLED NUT M5	5
4	SCREW M3x6 DIN 965-H BLACK	4
1	CP 12 PORT HINGE COVER	3
1	CP 12 PORT FIXED COVER	2
1	CP 12 PORT BASE	1

AMP part N° : 2-1671163-4

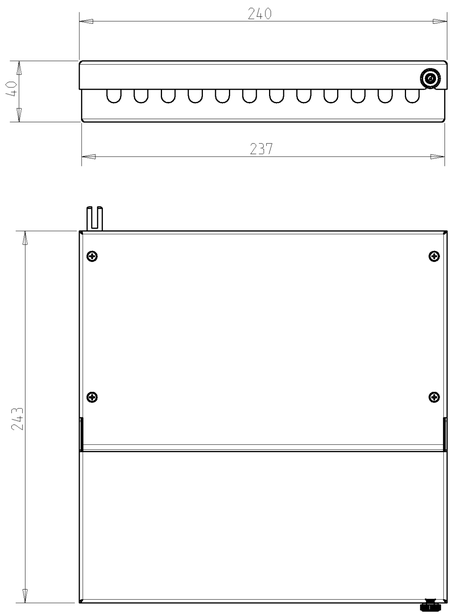

SCALE 0.500

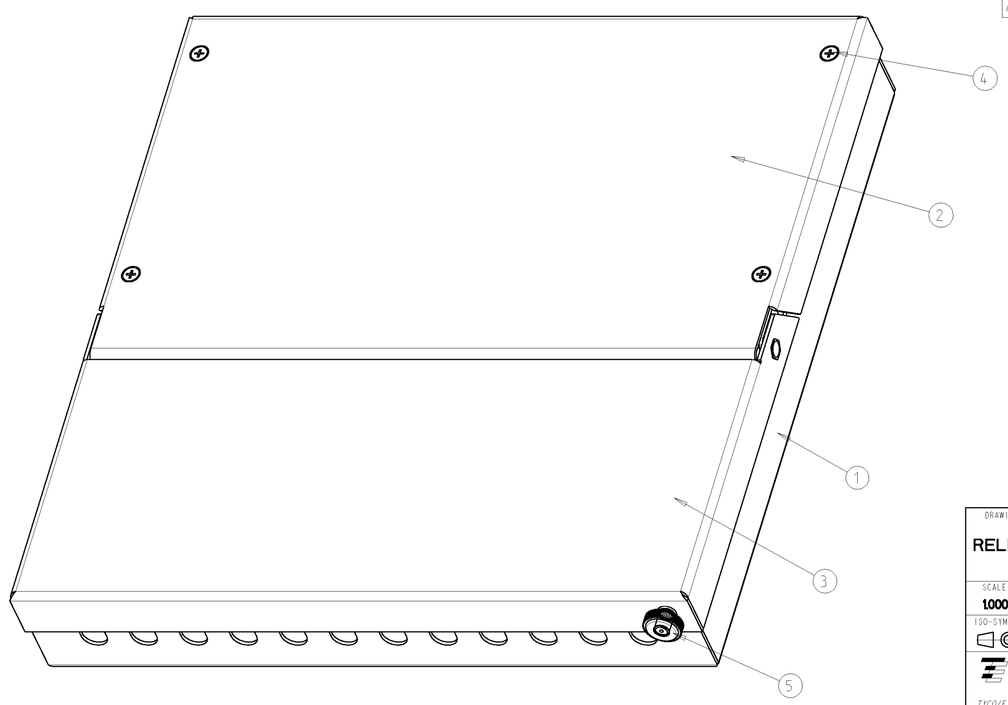

DRAWING STATUS RELEASED	REVISION DESCRIPTION: - Product line xtension		
	DRAWING BY NAME: R. VANDOREN DATE: 16-JUN-08	DRAWING REVISION BY NAME: DATE:	VOLUME in mm³
SCALE: 1.000	DRAWING FORMAT A1	DRAWING TITLE	
ISO-SYMBOL	GENERAL TOLERANCE	CONSOLIDATION POINT	
Tyco Electronics TYCO/Electronics - Raychem N.V. DIESTSESTEENWEG 692 B-3010 KESSEL-LO, BELGIUM		DRAWING_SHEET_REVISION NUMBER D_0016373_02_AB	REVISION AB

THIS DRAWING AND INFORMATION SET FORTH HEREON ARE THE PROPERTY OF TYCO/Electronics/Raychem N.V. AND ARE TO BE HELD IN TRUST AND CONFIDENCE. PUBLICATION, DUPLICATION, DISCLOSURE OR USE FOR ANY PURPOSE NOT EXPRESSLY AUTHORIZED IN WRITING BY TYCO/Electronics IS PROHIBITED.